Website Facebook YouTube

simon
LIGHT UP EMOTIONS

www.simonelectric.com

Simon, S.A.(Spain)
Tel. +34 902 109100
Web. www.simonelectric.com

Simon Electric (China)
Tel. +86 21 3855 5222
Web. www.simon.com.cn

Simon Electric (APAC)
Web. www.simon-apac.com
E-mail. info@simon-apac.com

PT Simon Elektrik Indonesia
Tel. +62 21 52960373
Web. www.simonelektrik.co.id

July 2022 Printed

Simon 2022-2024 Collection for Asia Pacific

simon

Product catalogue

Retail channel selection

simon

LIGHT UP EMOTIONS

Feeling, is what converts time into moments, into snap shot of time to remember.
Emotions convert space into a home, yours.

At Simon, we know that the spaces are the center of all these experience and be able to fill them with nuances and different intensity of sensual.
So you not only living them, but you resonating
with them.
Touch, see, hear, feel.
We want to offer you a whole range of sensations.

Simon, light up emotions.

Simon in the World

Simon is an industrial group with more than 100 years history.

Simon is the head of an industrial group specialised in technological solutions for lighting, light control, connectivity(IOT), and electrical materials for contract projects (retail, hospitality, workplace), and residential projects. In all these fields, Simon maintains a firm commitment to design and innovation, which led it to receive the National Design Award granted by the Ministry of Economy, Industry, and Competitiveness on its one hundredth anniversary. After positioning itself as a leader in the Spanish market, the company has consolidated its presence in more than 90 countries, The Simon Group team is made up of 4,000 people around the world, with facilities in 15 countries, 9 of which have production centres.

Simon: Since 1916 from Barcelona

Olot, 1920

Arthur Simon with his parents
1900

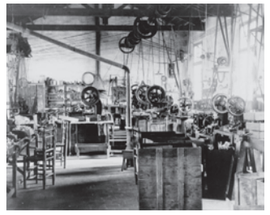

Interior of the factory on Calle Pare Roca, Olot
1925

Porcelain factory in Sant Andreu, Barcelona
1943

IEP booth at the Feria de Madrid
1949

1916

ARTURO SIMON CREATES THE COMPANY IN OLOT

1925

ARTURO SIMON EXPANDS THE RANGE OF ELECTRICAL EQUIPMENT

1942

THE PORCELAIN FACTORY OPENS

1957

SIMON BUYS PME

1966

SIMON BUYS IEP

1993

LAUNCH OF THE FIRST HOME AUTOMATION SYSTEM

1998

SIMON BEGINS TO INTERNATIONALISE

1999

SIMON ENTERS THE CHINA MARKET

Olot factory
1975

Hayan factory, China
1999

Sense
2015

Simon Vox,
1998

Beijing olympic stadium, China
2008

Ambassador visiting Simon China
2018

2006

SIMON ENTERS ASEAN MARKET

2008

Simon is selected as an official supplier of the 2008 Olympic games in Beijing.

2015

NEW SENSE INTERFACES

The combination of touch-control, ergonomics and interaction with the environment will make the Sense interfaces deserving of several international awards.

INTERNATIONAL AWARDS

The Slim and Cool luminaires in the Fluvia collection have won 5 international awards.
iF Awards for Fluvia Slim luminaires.
Red Dot Awards for the Slim and Cool Fluvia luminaires.
Delta Awards in the selection category for Slim and Cool.
Delta Awards for Detail 83.
iF Gold Awards for Sense.

2016

100 YEARS' ANNIVERSARY

2018

Mr.Alberto Carnero,the incumbent spanish ambassador to China,visiting Simon China.

INTERNATIONAL AWARDS
IF and Red Dot

2020

*Creation of the **iOT platform** and **Simon HUB Pro iO**.*

1916
Bayonet bulb mount

1920-1930
851 "Extra" rotary switch

1956
Simon 24

1962
Simon 25

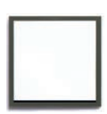

1973
Simon 36

1978
Simon 31

1992
Simon 75

1995
Simon 88

2005
Simon V8

2013
Simon i7

2016
Simon E6

2020
Simon E3

2022
Simon M3

CONTENTS

Smart Home

05
Smart Lamp(Wi-Fi)

06
Smart Downlight(Wi-Fi)

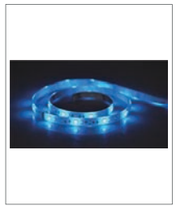
07
Smart Strip(Wi-Fi)

08
Smart FL50 Floodlight(Wi-Fi)

09
Smart Camera(Wi-Fi)

10
Smart Lock(Wi-FI)

11
Smart Remote Controller (Wi-Fi)

12
Smart socket (ZigBee/Wi-Fi)

13
Smart Gateway(ZigBee)

17
Smart Easy Switch (ZigBee)

18
Smart Spotlight KC1 (ZigBee)

19
Smart Curtain Motor (ZigBee/Wi-Fi)

Lighting

31
Valor Bulb

33
Valor Emergency Bulb

34
Valor High Power Bulb

35
Duro GU10

37
Valor T8 Double End Tube & Set

39
Duro T8 Single End Tube

40
Valor Downlight Gen2

43
CD20 Spotlight

45
CP20 Spotlight

47
KC1 Spotlight

53
RS22 Track Spotlight

55
Valor T5 Batten

56
CH22 Strip

59
SS22 Strip

61
SS22 COB Strip

63
SS20 Strip

65
PL22

66
Valor Slim Tunable Ceiling Light

67
Valor Ceiling Light

69
FL30 Floodlight

71
FL50 Floodlight

73
FL50 Floodlight CCT RGB SMART

75
SFL59 Floodlight Solar

77
RD50 Streetlight

MCB

81
Micro Circuit Breaker - 65C

Switch & Socket

85
E3

91
E35

97
E6

103
51A

109
51V

113
Track socket

IoT
Smart Home solution

Download the app in:

Google Play

App store

Simon Smart Home

Smart Home :

Smart Lamp(Wi-Fi)	05
Smart Downlight(Wi-Fi)	06
Smart Strip(Wi-Fi)	07
Smart FL50 Floodlight(Wi-Fi)	08
Smart Camera(Wi-Fi)	09
Smart Lock(Wi-FI)	10
Smart Remote Controller(Wi-Fi)	11
Smart Socket(/ZigBee/Wi-Fi)	12
Smart Gateway(ZigBee)	13
Smart Easy Switch(ZigBee)	17
Smart Spotlight KC1(ZigBee)	18
Smart Curtain Motor(ZigBee/Wi-Fi)	19

Simon
Smart

Smart lamp

Smart RGB+Tunable WH bulb(Wi-Fi)/Smart RGB WH GU10/Smart Tunable CCT GU10(Wi-Fi)

Features :

- Remote control by App:timer/custom scene/automation/group control
- Color changes follow the rhythm of the music
- Colorful light: RGB 16 million colors in full range
- Tunable White from 2700K to 6500K, dimming brightness
- Automation: act with other devices via gateway
- Voice control. Works with Alexa, Google speaker, Siri

RGB 16million Color | Custom Scene | Voice Control | Automation | Music Sync | App Control

Communication: ***Wi-Fi/BLE***
Installation: ***E27***
PF:***>0.5***
IP20
220-240V~50/60Hz
Finishes: ***White***
Lifetime:***20000h***

Bulb

GU10

Installation: ***GU10***
Lifetime:***20000h***

Smart downlight

Smart Downlight Dim&Tunable(Wi-Fi)

Features :

- App control:timer/custom scene/group control
- Tunable White from 2700K to 6500K
- Dimming brightness
- Voice control. Works with Alexa & Google speaker. Siri
- Automation: act with other devices via gateway

App Control | Voice Control | Automation | Plan and schedule

Communication: ***Wi-Fi/BLE***
Dimmable
Tunable
CRI: ***80***
PF:***0.5***
IP20
220-240V~50/60Hz
Finishes: ***White***
Lifetime:***20000h***

Smart Strip

Smart LED Strip RGB + CCT (Wi-Fi)

Features :

- RGB+CCT, millions of color freely changed
- Dimming brightness/Support dimming from dark to bright for different color
- Grouping and act with other devices via gateway / Can act with other devices, satisfy different scene customization requirement
- Plan and schedule/Can set timer or count-down function

RGB 16million Color | Custom Scene | Voice Control | Automation | Music Sync | App Control

Communication: ***Wi-Fi/BLE***
Installation: ***surface***
PF:***0.5***
IP20
50/60Hz
12V DC
Lifetime:***20000h***

Smart FL50 Floodlight

FL50 Smart LED Floodlight 50W RGBW(Wi-Fi)

Features :

- Colourful lighting for outdoor festival/16million dimmable colors
- Easy control via APP,could Group control/multiple scenes etc.
- Easy to set up and install/no hub required & adjustable iron bracket
- Reliable outdoor application/IP65 with Rebreather hole
- Durable Material & Good Dissipation/die-casting aluminum housing
- Low maintenance cost and long life/40,000h lifetime

App Control | Voice Control | Automation | Plan and schedule

Die casting aluminum
Optics: ***Alu reflector+high transmitance woven tempered glass***
Surge Protection: ***2kV-2kV***
Beam angle: ***110°***
CRI: ***80***
PF:>***0.9***
IP65
IK06
220-240V~50/60Hz
Lifetime:***40000h***

Smart Camera

Smart Camera 30/Smart Camera 20(Wi-Fi)

Features :

- Full HD 1080P live video/2million pixels
- 360° full view/Pan 355°&Tilt 110°
- 2-way voice intercom
- Support IR night vision/8-10m effective distance under night version situation
- Motion detection and smart tracking/alarm push
- Data privacy protection/cloud storage with Encrypted ID

1080P | 2-Way audio | No blind spot | Motion detection | Night vision | Motion tracking | Privacy mode

Smart Cam 30 Smart Cam 20

Smart Lock

Smart Lock LK33/LK20(Wi-Fi)

Features :

- 5 different unlock methods:Fingerprint/Password/Card/Key/Simon smart App
- Doorbell function
- Low power warning
- Pickproof alarm
- Virtual password
- Check door status
- Emergency power supply

5 Different unlock methods | Doorbell function | Low power warning | Pickproof Alarm | Virtual Password | Check door status | Emergency Power supply

Unlock method:
1. Fingerprint 2. Password 3. Card
4. Key 5. Simon Smart App
Support door direction:
1. Right hand open 2. Left hand open
Battery: ***AA * 4***
Door thickness: ***40~100mm***

Smart lock 33 Smart lock 20

Smart Remote Controller

Smart RF + IR(Wi-Fi)

Features :

- 6000+ IR code and support RF devices, fast match/compatible with mainstream brands of TV, air-conditioner, smart curtain motor, electric door.
- Different control modes/support App, voice control, timer and customized action with other devices
- USB power supply/no need extra battery

App Control | Voice Control | Automation | Plan and schedule

IR Control Devices

Projector | IR bulb | AC | TV | Set Top Box | Fan | Other

RF Control Devices

Curtain | Drying rack | Fan lamp | Electric door | RF switch | Window motor | Others

Smart Socket

Smart Adaptor(Wi-Fi) / Smart Socket Module(ZigBee/Wi-Fi)

Features :

- Remote control, any time you need it
- Plan and schedule, support timing and count-down
- Wide range of socket and plug types

App Control | Voice Control | Remote Control | Plan and schedule

Load: ***Max 16A***
Installation: ***install in socket wall box, compatible with Euro-standard wall box***
Communication: ***Wi-Fi/ZigBee***

Smart Socket Module

Installation:
plug and play
Communication:
Wi-Fi

BS | US | Schuko | AU | US std | BS std

Every ZigBee device starts with the gateway

Communication

The Zigbee devices create a strong mesh network for home automation. That mesh helps us to cover all the home, or any installation with only one gateway. Each zigbee device is a node which can support communication, the different elements help to bounce the information until it arrives to the gateway.

The recent addition of ZigBee 3.0 with excellent protocol performence created a unified standard to let all devices work together.

The gateway is:

- The control center of smart home.
- The bridge between the ZigBee device and the cloud.
- Based on Zigbee3.0 protocol.
- Able to support 100+ devices at the same time.
- The key for a remote control.
- Reliable for a local control.
- Able to support the interconnection of 3rd party devices.
- Equipped with AES secure encryption to fully protect your privacy.

Smart Gateway

zigbee

Smart Wall-mounted Dual-USB Gateway(Wi-Fi)

Features :

- Easy to install: replace traditional socket in 86 mounting box
- Support max 20W Quick charge + Zigbee3.0 Smart gateway
- Integrate with Simon Smart system: Support 20 ZigBee devices
- Type A+C Dual USB Port: no need adaptor for charging
- Local automation service will continue when the network down
- Safety and reliable: over-Temperature, overload and short circuit protection function

APP App Control | Voice Control | Energy saving | Privacy security

i7

E6

M6

E3

M3

Simon Smart
Smart Gateway

Smart Gateway

Smart Zigbee Gateway (LAN) / Smart Zigbee Gateway (Wi-Fi)

Features :

- Easy to install: plug and play
- OTA, free upgrade for lifetime
- Integrate with Simon Smart system: Support 100 ZigBee devices (LAN)/50 ZigBee devices (WiFi)
- Local automation service will continue when the network down
- Ultra-low power consumption
- Safety and reliable: over-Temperature, overload and short circuit protection function

App Control | Voice Control | Energy saving | Privacy security

Smart Zigbee Gateway (LAN)

Smart Zigbee Gateway (Wi-Fi)

Smart Easy Switch

zigbee

Smart Easy Switch(ZigBee)(no neutral)

Features :

- No extra wiring, retrofit in original 86 wall box
- Same wiring method with traditional switch
- Safety and reliable hardware
- ZigBee 3.0 | Customized Antenna | TV-8 Relay
- Remote control on/off, Timer setting, Indicator setting, Scenario and automation

App Control | Voice Control | Wall switch | Automation

i7

E6

E3

M3

Communication: ***ZigBee***
Voltage: ***250v ~50/60Hz***
Max Load: ***200W per Gang***
Min Load: ***3W***
Ambient Humidity: ***≤90%RH(no condensation)***
Support 1/2/3 Gang
Multi colors optional
suitable for more household styles

Smart Spotlight KC1

zigbee

Smart Spotlight KC1 Tunable WH

Features :

- Excellent chip/Splendid COB, CRI>90
- Constant current driver with anti-over-voltage and short circuit protection
- Various structure/multiple module,match with 30 kinds of frames
- Exact lighting distribution/Lens+reflector secondary optical design: TIR anti-osmotic lens;Various beam angle,minimum to 15°
- App control:timer/custom scene/group control
- Tunable White from 2700K to 6000K
- Dimming brightness
- Voice control. Works with Alexa & Google speaker. Siri

Home | Hotels | Retail

Installation: ***Recessed***
Die Casting Alu heat sink
PF: ***0.9***
IP20
50/60Hz
Communication: ***ZigBee***
Anti-glare
CRI ***≥90***
Finishes: ***Black***
Lifetime: ***30000h***

Smart LED KC1
Tunable WH Module

1. SC1 constant current dim+tunable WH driver
2. Dim+tunable WHZigbee module

Smart Curtain Motor

zigbee

Smart Curtain Motor(ZigBee/Wi-Fi)

Features :

- Silent design
- Remote control and voice control
- Plan and schedule
- Manual trigger to auto on/off
- Obstruction detection
- Automation: act with other devices via gateway

App Control | Voice Control | Plan and schedule | Automation

Rated torque: ***1.2N.m***
RPM: ***100r/min***
IP Grade: ***IP20***
Running speed: ***14cm/s***
RF: ***433Hz***
Max current: ***2A***
Max power: ***24W***
Max Load: ***50kg***
Weight: ***1.2kg***
Communication: ***Wi-Fi/ZigBee***

Smart lamp(Wi-Fi)

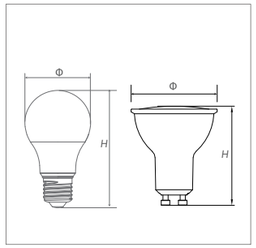

Order Code	Product Description	Nominal Power	Color Temperature	Luminous Flux@6500K	Beam Angle	Product Size (mm)	Pcs/Carton	Carton Size
N62E0-1153	Smart RGB + Tunable CCT bulb 8.5W WIFI	8.5	RGB 16 million colors in full range	806lm	180°	60×109	100	660×325×242
N62E0-1170	Smart LED GU10 Tunable WH 5W 2700-6500K WIFI	5	2700K-6500K	350lm	100°	50×58	100	570x280x150
N62E0-1171	Smart LED GU10 RGB+Tunable WH 5W WIFI	5	RGB+Tunable WH	350lm	100°	50×58	100	570x280x150

Smart downlight(Wi-Fi)

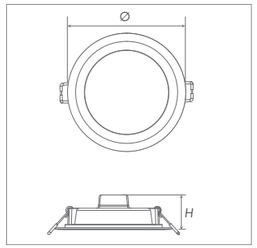

Order Code	Product Description	Nominal Power	Luminous Flux@6500K	Cutout size (mm)	Product Size (mm)	Pcs/Carton	Carton Size
N03E0-1142	Smart LED downlight Dim&Tunable 8W WIFI	8	600 lm	Φ85-Φ95	Φ105×35	30	373×252×230
N03E0-1143	Smart LED downlight Dim&Tunable 17W WIFI	17	1200 lm	Φ145-Φ155	Φ165×38	30	515×345×245
N03E0-1144t	Smart LED downlight Dim&Tunable 24W WIFI	24	2000 lm	Φ195-Φ205	Φ215×38	30	677×478×225

Smart Strip(Wi-Fi)

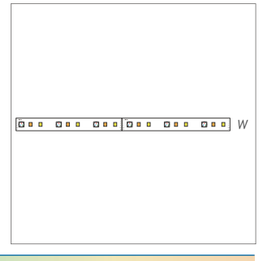

Order Code	Product Description	Nominal Power	Color Temperature	Luminous Flux@6000K	Product Size (/ 72 pcs Leds per meter)	Length per Roll	Pcs/Carton	Carton Size
N68E0-0060	Smart LED Strip RGB+Tunable WH 9W 3000-6000K EU 2M WIFI	9W	RGB+CCT	540lm	12mm width	2m	30	450x350x305
N68E0-0061	Smart LED Strip RGB+Tunable WH 15W 3000-6000K EU 5M WIFI	15W	RGB+CCT	950lm	12mm width	5m	20	360x360x370
N68E0-0062	Smart LED Strip RGB+Tunable WH 9W 3000-6000K BS 2M WIFI	9W	RGB+CCT	540lm	12mm width	2m	30	450x350x305
N68E0-0063	Smart LED Strip RGB+Tunable WH 15W 3000-6000K BS 5M WIFI	15W	RGB+CCT	950lm	12mm width	5m	20	360x360x370

Smart FL50 Floodlight(Wi-Fi)

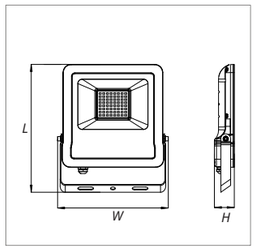

Order Code	Product Description	Nominal Power	Color Temperature	Luminous Flux	Light Efficiency	Control	Cable	Product Size (L×W×H mm)	Pcs/Carton	Carton Size (L×W×H mm)
L05E0-0073	FL50 Smart LED floodlight 50W RGBW WiFi	50W	RGBW	5000 lm	80 lm/w	Simon smart app	30cm, 3*1mm² rubber cable /double-insulated	284×244×39	6	300×270×308

Smart Camera(Wi-Fi)

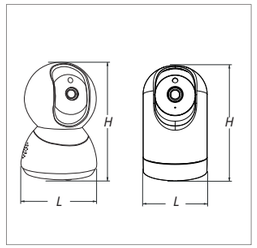

Order Code	Product Description	Nominal Power	Pixel	Video compression	Local storage	Product Size (L×W×H mm)	Pcs/Carton	Carton Size (L×W×H mm)
S00E0-S006	Smart camera 30	USB 5V/1A	2Million	H.264 high profile	Micro SD Max 128G	81×79×117	50	583×583×370
S00E0-S007	Smart camera 20	USB 5V/1A	2Million	H.264 high profile	Micro SD Max 128G	73×73×120	40	495×400×360

Smart Lock(Wi-Fi)

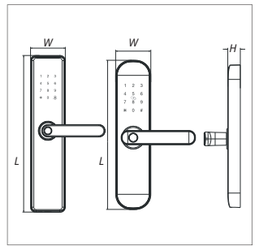

Order Code	Product Description	Hijack Alarm	Doorbell	Back Locking	Lock body	Product Size (L×W×H mm)	Pcs/Carton	Carton Size (L×W×H mm)
S00E0-LK33	LK33 Simon smart lock	●	●	●	6068	330×71×25	6	475×380×520
S00E0-LK20	LK20 Simon smart lock	●	●	●	5052	270×63×24	6	410×385×435

Batteries are NOT included in the package

Smart Remote Controller(Wi-Fi)

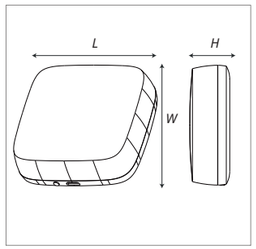

Order Code	Product Description	Communication	Power Supply	Product Size (L×W×H mm)	Pcs/Carton	Carton Size (L×W×H mm)
S00E0-S016	Smart Infrared Remote Controller	WiFi	USB 5V/1A	70×70×26	50	380×380×120
S00E0-S017	Smart RF Infrared Remote Controller	WiFi	USB 5V/1A	70×70×26	50	380×380×120

Smart Socket(ZigBee/Wi-Fi)

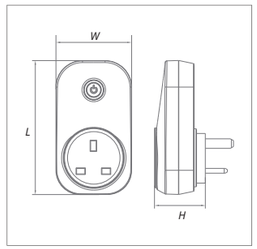

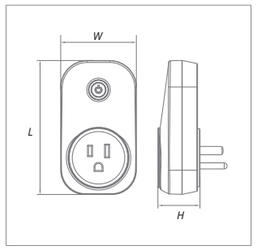

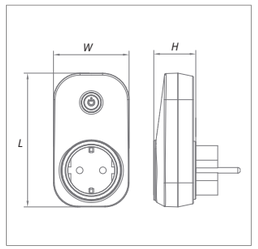

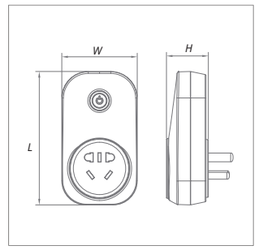

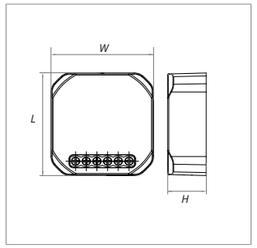

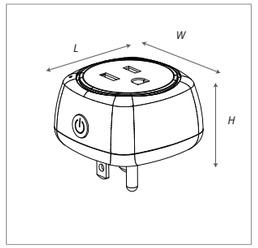

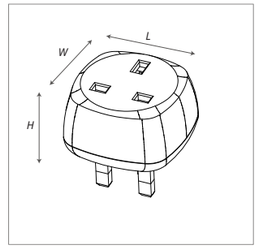

Order Code	Product Description	Rated Current	Rated Voltage	Product Size (L×W×H mm)	Pcs/Carton	Carton Size (L×W×H mm)
S00E0-S001	Simon Smart adapter BS std	13A	230VAC	110×62×42	50	32.5×23.5×39.5
S00E0-S002	Simon Smart adapter US std	15A	120VAC	110×62×35	50	32.5×23.5×39.5
S00E0-S003	Simon Smart adapter Schoku std	16A	230VAC	110×62×35	50	32.5×23.5×39.5
S00E0-S004	Simon Smart adapter AU std	15A	230VAC	110×62×44	50	32.5×23.5×39.5
S00E0-S018	Simon Smart adapter BS std	10A	100-240VAC	57×57×56.5	50	330×330×150
S00E0-S019	Simon Smart adapter US std	10A	100-240VAC	55×55×52	50	330×330×150
S00E0-S020	Simon Smart Socket Module(Wi-Fi)	16A	100-240VAC	48×48×18	250	295×295×275
S00E0-S021	Simon Smart Socket Module(ZigBee)	16A	100-240VAC	48×48×18	250	295×295×275

Smart Gateway

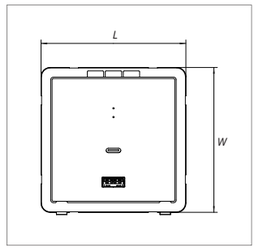

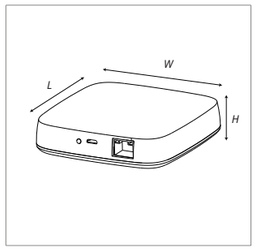

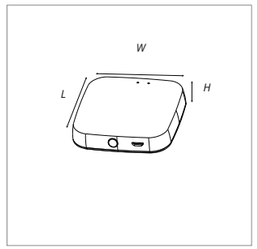

Order Code	Product Description	Communication	Power Supply	Recommended Zigbee Devices	Product Size (L×W×H mm)	Pcs/Carton	Carton Size (L×W×H mm)
S00E0-S008	Smart Zigbee Gateway (LAN)	LAN/ZigBee	USB 5V/1A	<100	95×95×23	50	525×280×235
S00E0-S009	Smart Zigbee Gateway (WiFi)	WiFi/ZigBee	USB 5V/1A	<40	65×65×14.5	50	380×380×120
55E761TY	M6 Smart Wall-mounted USB A+C Gateway(WiFi)	WiFi/ZigBee	250V ~50/60Hz	<40	83×82×42.3	60	510×330×190
530610	1 Gang frame for M6 gateway					200	510×330×190
70E761TY	i7 Smart ZigBee Wall-mounted USB A+C Gateway(WiFi)	WiFi/ZigBee	250V ~50/60Hz	<40	83×82×42.3	60	510×330×190
700610	1 Gang frame for i7 gateway					240	530*370*260
72E8061TY	E6 Smart ZigBee Wall-mounted USB A+C Gateway(WiFi)	WiFi/ZigBee	250V ~50/60Hz	<40	83×82×42.3	60	510×330×190
30E8061TY	E3 Smart ZigBee Wall-mounted USB A+C Gateway(WiFi)	WiFi/ZigBee	250V ~50/60Hz	<40	83×82×42.3	60	510×330×190
58E8061TY	M3 Smart ZigBee Wall-mounted USB A+C Gateway(WiFi)	WiFi/ZigBee	250V ~50/60Hz	<40	83×82×42.3	60	510×330×190

Smart Easy Switch

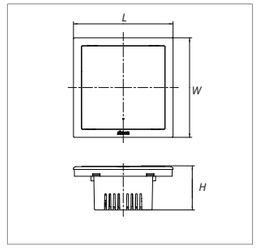

Order Code	Series	Product Description	Communication	Power Supply	Recommend Load	Product Size (L×W×H mm)	Pcs/Carton	Carton Size (L×W×H mm)
681820TY	Easy switch	6 Gang Remote Control Scene Switch Module	ZigBee	Battery:CR2032	/	86×86	200	530×370×260
30E831TY	Easy switch E3	1 Gang Smart Easy Switch	ZigBee	250V ~50/60Hz	>3W, 200W/Gang	86×86×37.8	80	510×330×190
30E832TY	Easy switch E3	2 Gang Smart Easy Switch	ZigBee	250V ~50/60Hz	>3W, 200W/Gang	86×86×37.8	80	510×330×190
30E833TY	Easy switch E3	3 Gang Smart Easy Switch	ZigBee	250V ~50/60Hz	>3W, 200W/Gang	86×86×37.8	80	510×330×190
72E8031TY	Easy switch E6	1 Gang Smart Easy Switch	ZigBee	250V ~50/60Hz	>3W, 200W/Gang	86×86×40.9	80	510×330×190
72E8032TY	Easy switch E6	2 Gang Smart Easy Switch	ZigBee	250V ~50/60Hz	>3W, 200W/Gang	86×86×40.9	80	510×330×190
72E8033TY	Easy switch E6	3 Gang Smart Easy Switch	ZigBee	250V ~50/60Hz	>3W, 200W/Gang	86×86×40.9	80	510×330×190
58E8031TY	Easy switch M3	1 Gang Smart Easy Switch	ZigBee	250V ~50/60Hz	>3W, 200W/Gang	86×86×38.6	80	510×330×190
58E8032TY	Easy switch M3	2 Gang Smart Easy Switch	ZigBee	250V ~50/60Hz	>3W, 200W/Gang	86×86×38.6	80	510×330×190
58E8033TY	Easy switch M3	3 Gang Smart Easy Switch	ZigBee	250V ~50/60Hz	>3W, 200W/Gang	86×86×38.6	80	510×330×190
58E831TY	Easy switch I7	1 Gang Smart Easy Switch Module	ZigBee	250V ~50/60Hz	>3W, 200W/Gang	76×76×38.6	80	510×330×190
58E832TY	Easy switch I7	2 Gang Smart Easy Switch Module	ZigBee	250V ~50/60Hz	>3W, 200W/Gang	76×76×38.6	80	510×330×190
58E833TY	Easy switch I7	3 Gang Smart Easy Switch Module	ZigBee	250V ~50/60Hz	>3W, 200W/Gang	76×76×38.6	80	510×330×190
700610	I7	1 Gang frame					240	530×370×260
700620	I7	2 Gang frame(76 type)					120	530×370×260
700630	I7	3 Gang frame(76 type)					80	530×370×260
700640	I7	4 Gang frame(76 type)					42	450×365×210
700650	I7	5 Gang frame(76 type)					24	450×365×210
700820	I7	2 Gang frame(86 type)					120	530×370×260
700830	I7	3 Gang frame(86 type)					80	530×370×260
700840	I7	4 Gang frame(86 type)					42	450×365×210
700850	I7	5 Gang frame(86 type)					24	450×365×210

Smart Spotlight KC1 Tunable WH(ZigBee)

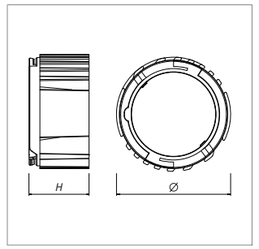

Order Code	Product Description	Nominal Power	Voltage	Beam Angle	Luminous Flux@6500K	Product Size (L×W×H mm)	Pcs/Carton	Carton Size (L×W×H mm)
N62E0-1157	Smart LED KC1 Tunable WH Module Max12W15°2700-6000K	12	DC 30~36V	15°	Max.700lm	ø57*57	24	360×210×160
N62E0-1158	Smart LED KC1 Tunable WH Module Max12W24°2700-6000K	12	DC 30~36V	24°	Max.750lm	ø57*57	24	360×210×160
N62E0-1159	Smart LED KC1 Tunable WH Module Max12W36°2700-6000K	12	DC 30~36V	36°	Max.760lm	ø57*57	24	360×210×160
N62E0-1160	Smart LED KC1 Tunable WH Module Max12W60°2700-6000K	12	DC 30~36V	60°	Max.840lm	ø57*57	24	360×210×160
N6524-0391	SC1 constant current dim+tunable WH driver (5W100mA36VDC)	5	220-240V~	-	-	158×48×26	24	360×210×160
N6524-0392	SC1 constant current dim+tunable WH driver (7W160mA36VDC)	7	220-240V~	-	-	158×48×26	24	360×210×160
N6524-0393	SC1 constant current dim+tunable WH driver (9W200mA36VDC)	9	220-240V~	-	-	158×48×26	24	360×210×160
N6524-0394	SC1 constant current dim+tunable WH driver (12W300mA36VDC)	12	220-240V~	-	-	158×48×26	24	360×210×160
N6524-0412	Dim+tunable WH zigbee module	-	-	-	-	41×37×18	120	360×210×160

Order Code	Product Description	Finishing	Cutout Size (mm)	Product Size (L×W×H mm)	Pcs/Carton	Carton Size (L×W×H mm)
N0424-1651	Duro KC1 IP44 frame	White	Φ75	Φ82*38.5	48	390×345×210
N0424-0231	Duro KC1 ivory 10° anti-glare frame	Ivory	Φ75	Φ85*23	48	390×285×210
N0424-0232	Duro KC1 ivory 30° anti-glare frame	Ivory	Φ75	Φ85*30	48	390×285×210
N0424-0233	Duro KC1 black 10° anti-glare frame	Black	Φ75	Φ85*23	48	390×285×210
N0424-0234	Duro KC1 black 30° anti-glare frame	Black	Φ75	Φ85*30	48	390×285×210
N0424-0271	Duro KC1 round frame	White	Φ75	Φ85*32	48	390×285×210
N0424-0272	Duro KC1 oval frame	White	Φ75	Φ85*32	48	390×285×210

Order Code	Product Description	Finishing	Cutout Size (mm)	Product Size (L×W×H mm)	Pcs/Carton	Carton Size (L×W×H mm)
N0424-0273	Duro KC1 ivory 10° anti-glare square frame	Ivory	Φ75	85*85*23	48	390×345×210
N0424-0274	Duro KC1 ivory 30° anti-glare square frame	Ivory	Φ75	85*85*30	48	390×345×210
N0424-0275	Duro KC1 black 10° anti-glare square frame	Black	Φ75	85*85*23	48	390×345×210
N0424-0276	Duro KC1 black 30° anti-glare square frame	Black	Φ75	85*85*30	48	390×345×210
N0424-0277	Duro KC1 round embedded frame	White	Φ90	Φ80*35	48	495×395×240
N0424-0278	Duro KC1 square embedded frame	White	90*90	86*86*35	48	495×395×240

Order Code	Product Description	Finishing	Cutout Size (mm)	Product Size (L×W×H mm)	Pcs/Carton	Carton Size (L×W×H mm)
N0424-0279	Duro KC1 single flat grid frame	White	Φ85	97.5*97.5*30	48	390×375×240
N0424-0280	Duro KC1 double flat grid frame	White	85*190	97.5*205*30	24	445×375×200
N0424-0281	Duro KC1 triple flat grid frame	White	85*300	97.5*312.5*30	12	375×340×200
N0424-0282	Duro KC1 single anti-glare grid frame	White	100*100	115*115*45	48	510×420×270
N0424-0283	Duro KC1 double anti-glare grid frame	White	100*220	115*237*45	24	515×420×260
N0424-0284	Duro KC1 triple anti-glare grid frame	White	100*330	115*344*45	12	135×60×355

Order Code	Product Description	Finishing	Cutout Size (mm)	Product Size (L×W×H mm)	Pcs/Carton	Carton Size (L×W×H mm)
N0424-0391	Duro KC1 White anti-glare plastic frame	White	Φ75	Φ90*30	48	390×345×210
N0424-0392	Duro KC1 black anti-glare plastic frame	Black	Φ75	Φ90*30	48	390×345×210
N0424-0393	Duro KC1 silver anti-glare plastic frame	Silver	Φ75	Φ90*30	48	390×345×210
N0424-0394	Duro KC1 champagne anti-glare plastic frame	Champagne	Φ75	Φ90*30	48	390×345×210
N0424-0395	Duro KC1 rose gold anti-glare plastic frame	Rose Gold	Φ75	Φ90*30	48	390×345×210
N0424-0430	Duro KC1 shining black anti-glare metal frame	Black	Φ75	Φ85*30	48	390×345×210
N0424-0431	Duro KC1 matt silver anti-glare metal frame	Silver	Φ75	Φ85*30	48	390×345×210
N0424-0433	Duro KC1 shining black anti-glare plastic frame	Black	Φ75	Φ85*30	48	390×345×210
N0424-0434	Duro KC1 matt silver anti-glare plastic frame	Silver	Φ75	Φ85*30	48	390×345×210
N0424-1655	Duro KC1 shining black frame	Black	Φ75	Φ85*40.5	48	410×375×320
N0424-1654	Duro KC1 shining silver frame	Silver	Φ75	Φ85*40.5	48	410×375×320

Simon Smart
Smart Specification

Smart Curtain Motor(ZigBee)(Wi-Fi)

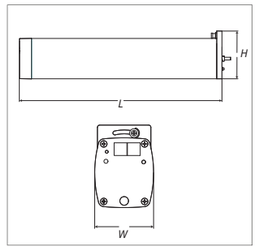

Order Code	Product Description	Communication	Input voltage	Product Size (L×W×H mm)	Pcs/Carton	Carton Size (L×W×H mm)
S00E0-S022	Smart curtain motor(ZigBee)	ZigBee	100-240V	301*51*71	10	375×620×180
S00E0-S023	Smart curtain motor(Wi-Fi)	Wi-Fi	100-240V	301*51*71	10	375×620×180

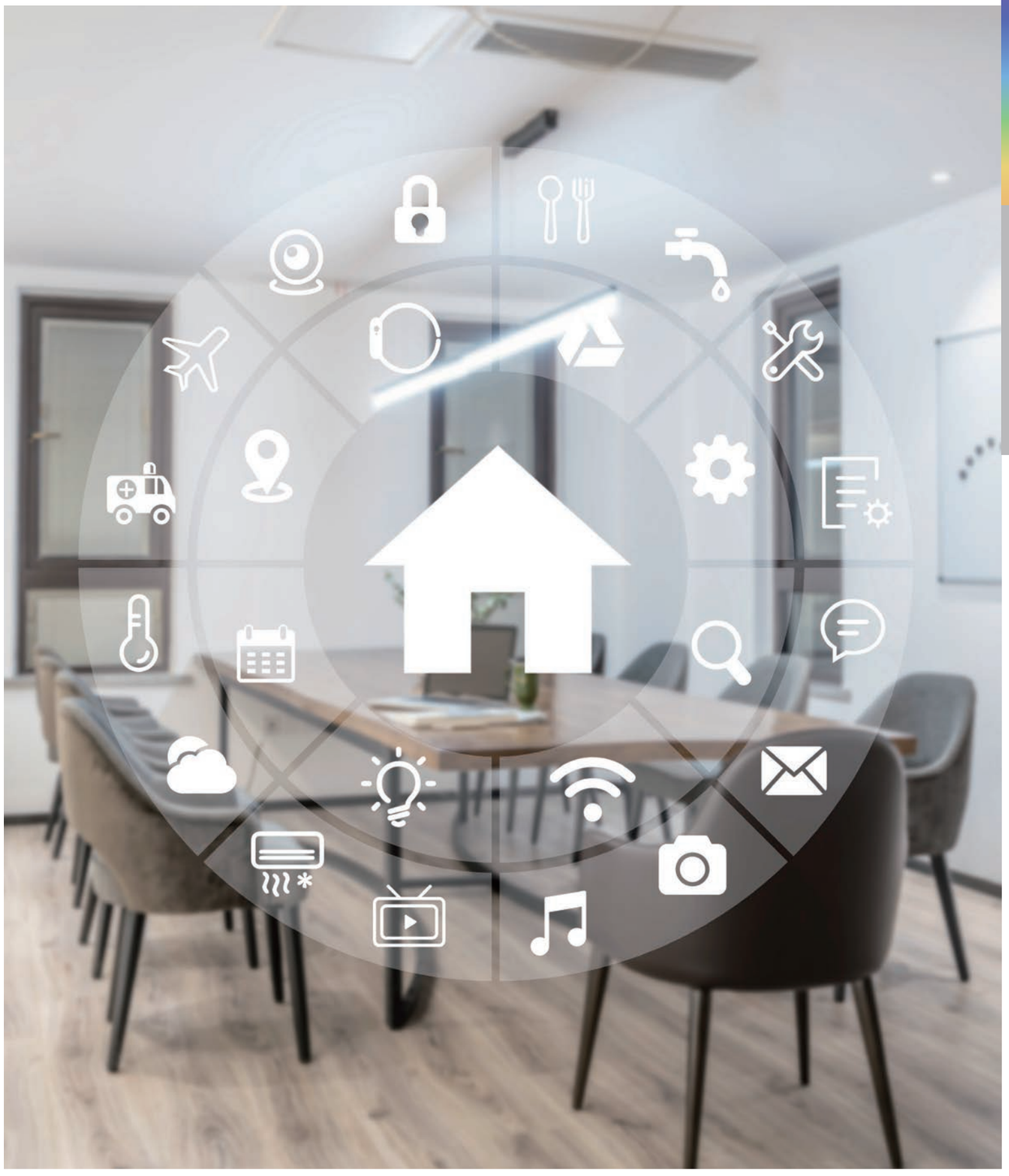

Simon Smart
Smart Specification

SIMON LIGHTING

Simon LED range solutions is able to fullfill all your necessities.

Home, office, commercial, hotel, residential and outdoor.

Lamp

Valor Bulb	31
Valor Emergency Bulb	33
Valor High Power bulb	34
Duro GU10	35
Valor T8 Double End Tube & Set	37
Duro T8 Single End Tube	39

Luminaire

Valor Downlight Gen2	40
CD20 Downlight	43
CP20 Spotlight	45
KC1 Spotlight	47
RS22 Track Spotlight	53
Valor T5 Batten	55
CH22 Strip	56
SS22 Strip	59
SS22 COB Strip	61
SS20 Strip	63
PL22	65
Valor Slim Tunable Ceiling Light	66
Valor Ceiling Light	67
FL30 Floodlight	69
FL50 Floodlight	71
SFL59 Floodlight Solar	75
RD50 Streetlight	77

Valor Bulb

Features :

- Wide range from 3w to15w, multiple choice for light color
- Easy retrofit incandescent and CFL lamp for saving energy up to 80%
- Longer lifespan/up to 10 years(*4hrs/day)
- Flicker free/reduce eye stress
- Free of IR and UV radiation
- Fast heat dissipation

Application :

Home Public area Retail

Certification :

CE TIS.2955-2553 TIS.2779-2552 SNI EMC

Dimensional Drawing:

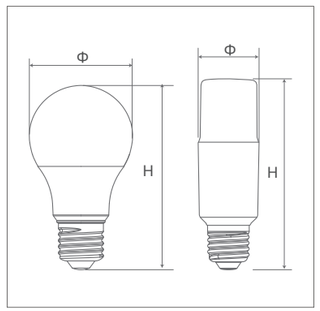

Specification

AC	PF	INSTL	CRI	Non	Lifetime
220-240V	*0.5*	*E27*	*80*	*-Dim*	*20000h*

Order Code	Product Description	Nominal Power	Color Temperature	Luminous Flux	Light Efficiency (lm/W)	Product Size (Φ×H mm)	Pcs/Carton	Carton Size (L*W*H mm)
N62E0-1097	Valor LED G45 3W 3000K	3W	3000K	250lm	85lm/W	Φ45×77	100	510×250×200
N62E0-1098	Valor LED G45 3W 4000K	3W	4000K	250lm	85lm/W	Φ45×77	100	510×250×200
N62E0-1099	Valor LED G45 3W 6500K	3W	6500K	250lm	85lm/W	Φ45×77	100	510×250×200
N62E0-1100	Valor LED A60 5W 3000K	5W	3000K	500lm	100lm/W	Φ60×107	100	660×325×255
N62E0-1101	Valor LED A60 5W 4000K	5W	4000K	500lm	100lm/W	Φ60×107	100	660×325×255
N62E0-1102	Valor LED A60 5W 6500K	5W	6500K	500lm	100lm/W	Φ60×107	100	660×325×255
N62E0-1103	Valor LED A60 7W 3000K	7W	3000K	700lm	100lm/W	Φ60×107	100	660×325×255
N62E0-1104	Valor LED A60 7W 4000K	7W	4000K	700lm	100lm/W	Φ60×107	100	660×325×255
N62E0-1105	Valor LED A60 7W 6500K	7W	6500K	700lm	100lm/W	Φ60×107	100	660×325×255
N62E0-1106	Valor LED A60 9W 3000K	9W	3000K	1000lm	110lm/W	Φ60×109	100	660×325×255
N62E0-1107	Valor LED A60 9W 4000K	9W	4000K	1000lm	110lm/W	Φ60×109	100	660×325×255
N62E0-1108	Valor LED A60 9W 6500K	9W	6500K	1000lm	110lm/W	Φ60×109	100	660×325×255
N62E0-1109	Valor LED A60 11W 3000K	11W	3000K	1210lm	110lm/W	Φ60×109	100	660×325×255
N62E0-1110	Valor LED A60 11W 4000K	11W	4000K	1210lm	110lm/W	Φ60×109	100	660×325×255
N62E0-1111	Valor LED A60 11W 6500K	11W	6500K	1210lm	110lm/W	Φ60×109	100	660×325×255
N62E0-1112	Valor LED A60 13W 3000K	13W	3000K	1430lm	110lm/W	Φ60×120	100	660×325×280
N62E0-1113	Valor LED A60 13W 4000K	13W	4000K	1430lm	110lm/W	Φ60×120	100	660×325×280
N62E0-1114	Valor LED A60 13W 6500K	13W	6500K	1430lm	110lm/W	Φ60×120	100	660×325×280
N62E0-1154	Valor LED A70 15W 3000K	15W	3000K	1600lm	110lm/W	Φ71×142	80	610×375×325
N62E0-1155	Valor LED A70 15W 4000K	15W	4000K	1650lm	110lm/W	Φ71×142	80	610×375×325
N62E0-1156	Valor LED A70 15W 6500K	15W	6500K	1650lm	110lm/W	Φ71×142	80	610×375×325
N62E0-1115	Valor LED T37 9W 3000K	9W	3000K	1000lm	110lm/W	Φ37×116	100	440×215×270
N62E0-1116	Valor LED T37 9W 4000K	9W	4000K	1000lm	110lm/W	Φ37×116	100	440×215×270
N62E0-1117	Valor LED T37 9W 6500K	9W	6500K	1000lm	110lm/W	Φ37×116	100	440×215×270
N62E0-1118	Valor LED T45 10W 3000K	10W	3000K	1150lm	115lm/W	Φ45×137	100	510×250×310
N62E0-1119	Valor LED T45 10W 4000K	10W	4000K	1150lm	115lm/W	Φ45×137	100	510×250×310
N62E0-1120	Valor LED T45 10W 6500K	10W	6500K	1150lm	115lm/W	Φ45×137	100	510×250×310

Valor Emergency Bulb

Features :

- Wide operation voltage:100-300V
- 2.5kV surge protection
- High lumen efficiency/up to 110lm/w
- High light output at emergency mode and last more than 5hrs
- Easy for emergency use/cap holder included in package

Application :

Home Public area Retail

Certification :

TR.10956-0551
TR.27794-2562

Dimensional Drawing:

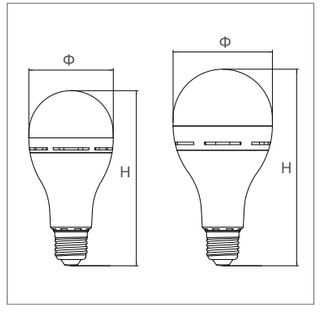

Specification

AC100 -300V	PF 0.9	INSTL E27	Non-dim	CCT 6800K

Order Code	Product Description	Nominal Power	Color Temperature	AC Luminous Flux(lm/m)	AC Light Efficiency (lm/W)	DC Luminous Flux	Battery Capacity	Product Size (Φ×H mm)	Pcs /Carton	Carton Size (L×W×H mm)
N62E0-1178	Valor LEDemergency bulb-A67 7W6800K	7W	6800K	800lm	110lm/W	500lm	2000mAh	Φ68×141	50	440x440x353
N62E0-1179	Valor LEDemergency bulb-A67 9W6800K	9W	6800K	1000lm	110lm/W	600lm	2000mAh	Φ68×141	50	440x440x353
N62E0-1180	Valor LEDemergency bulb-A67 12W6800K	12W	6800K	1250lm	110lm/W	700lm	2600mAh	Φ68×141	50	440x440x353
N62E0-1181	Valor LEDemergency bulb-A80 15W6800K	15W	6800K	1450lm	110lm/W	750lm	2600mAh	Φ80×158	50	380x380x305

Valor High Power Bulb

Features :

- Wide range from 20w to 65w (E40 cap included in 65W package)
- Long lifespan/up to 5years(*12hrs/day)
- Energy saving/more than 50% energy saving compared to CFL
- High lumen efficiency/up to 140lm/w

Application :

Warehouse Factory Retail Public area

Certification :

CE TR.10956-0551 TR.27794-2562 SNI EMC

Dimensional Drawing:

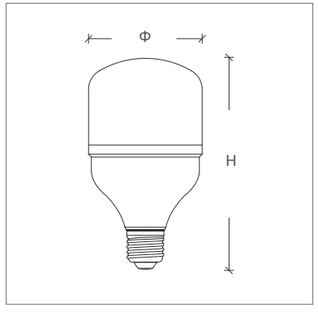

Specification

AC220-240V 50/60Hz	PF 0.5	INSTL E27	CRI⩾80 R9>0	Non -Dim	Lifetime 20000h

Order Code	Product Description	Nominal Power	Color Temperature	Luminous Flux	Light Efficiency (lm/W)	Product Size (Φ×H mm)	Pcs/Carton	Carton Size (L*W*H mm)
N62E0-1139	Valor LED T80 20W 3000K	20W	3000K	2800lm	140lm/W	Φ80×137	50	415×415×310
N62E0-1143	Valor LED T80 20W 6500K	20W	6500K	2800lm	140lm/W	Φ80×137	50	415×415×310
N62E0-1140	Valor LED T100 30W 3000K	30W	3000K	3300lm	110lm/W	Φ100×165	20	540×222×365
N62E0-1144	Valor LED T100 30W 6500K	30W	6500K	3300lm	110lm/W	Φ100×165	20	540×222×365
N62E0-1141	Valor LED T120 40W 3000K	40W	3000K	4000lm	100lm/W	Φ119×191	10	625×255×220
N62E0-1145	Valor LED T120 40W 6500K	40W	6500K	4000lm	100lm/W	Φ119×191	10	625×255×220
N62E0-1142	Valor LED T140 50W 3000K	50W	3000K	5000lm	100lm/W	Φ139×221	8	585×298×245
N62E0-1146	Valor LED T140 50W 6500K	50W	6500K	5000lm	100lm/W	Φ139×221	8	585×298×245
N62E0-1172	Valor LED T140 65W 3000K	65W	3000K	6800lm	105lm/W	Φ139×220	8	585X298X245
N62E0-1173	Valor LED T140 65W 6500K	65W	6500K	7000lm	110lm/W	Φ139×220	8	585X298X245

Duro GU10

Features :

- Easy retrofit halogen 50w for saving energy 85%
- Easy installation and maintenance
- Top seller wattage selection with dimming option

Application :

Home Hotels Retail

Certification :

CE TIS.1955-2551 TIS.2779-2562 CB SIRIM

Dimensional Drawing:

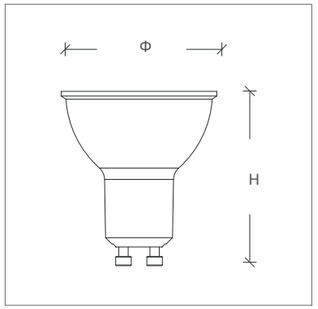

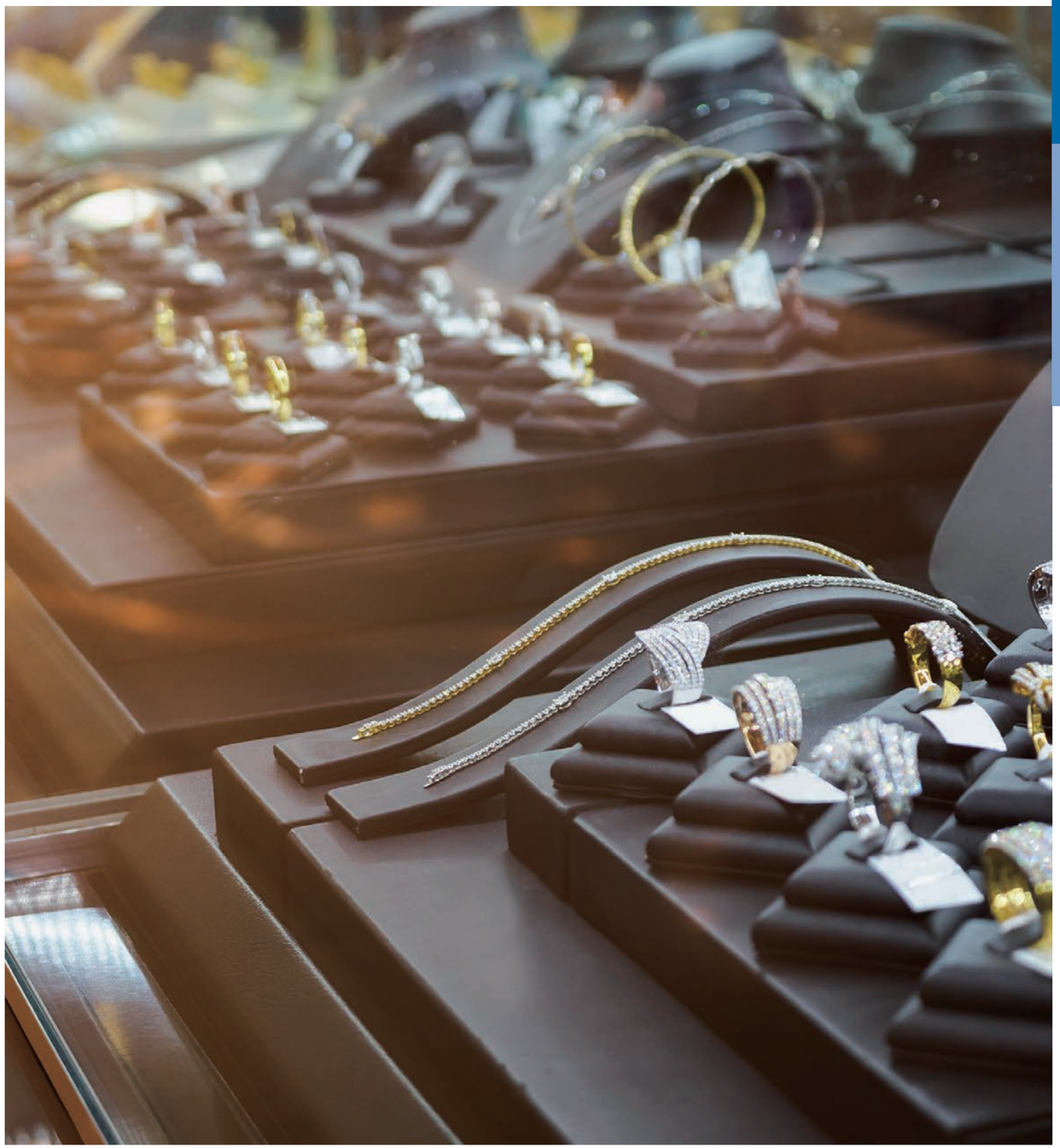

Specification

AC220-240V 50/60Hz	INSTL GU10	CRI≥80 R9>0	Beam angle 36°	Lifetime 20000h

Order Code	Product Description	Nominal Power	Color Temperature	Luminous Flux	PF	Dimmable	Product Size (Φ×H mm)	Pcs/Carton	Carton Size (L*W*H mm)
N62E0-1133	Duro LED-GU10(GEN3) 7W3000K	7W	3000K	530lm	0.5	/	Φ50×56	200	570×280×300
N62E0-1134	Duro LED-GU10(GEN3) 7W4000K	7W	4000K	560lm	0.5	/	Φ50×56	200	570×280×300
N62E0-1135	Duro LED-GU10(GEN3) 7W6500K	7W	6500K	560lm	0.5	/	Φ50×56	200	570×280×300
N62E0-1136	Duro LED-GU10(GEN3) 7W3000K TRIAC	7W	3000K	500lm	0.7	TRIAC	Φ50×56	200	570×280×300
N62E0-1137	Duro LED-GU10(GEN3) 7W4000K TRIAC	7W	4000K	520lm	0.7	TRIAC	Φ50×56	200	570×280×300
N62E0-1138	Duro LED-GU10(GEN3) 7W6500K TRIAC	7W	6500K	520lm	0.7	TRIAC	Φ50×56	200	570×280×300

Valor T8 Double End Tube & Set

Features :

- High lumen efficiency/up to 140lm/w
- Energy efficient/up to 60% energy saving
- Easy installation
- Complete set available for new installation

Application :

Home Office Retail Parking Supermarket Hospital

Certification :

TIS.1955-2551

Dimensional Drawing:

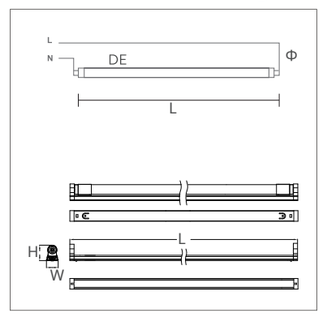

Specification

AC220-240V	PF	Tube	Double	CRI	Non	Lifetime
50/60Hz	***0.5***	***Glass***	***End***	***⩾80***	***-Dim***	***20000h***

Order Code	Product Description	Nominal Power	Color Temperature	Luminous Flux	Light Efficiency (lm/W)	Installation	Product Size (Ø×L/L×H×Wmm)	Pcs/Carton	Carton Size (L*W*H mm)
N62E0-1161	Valor LED T8 DE 9W 3000K Gen2	9W	3000K	950lm	110lm/W	G13 cap double end	Ø28×600	25	650×175×175
N62E0-1162	Valor LED T8 DE 9W 4000K Gen2	9W	4000K	950lm	110lm/W	G13 cap double end	Ø28×600	25	650×175×175
N62E0-1163	Valor LED T8 DE 9W 6500K Gen2	9W	6500K	950lm	110lm/W	G13 cap double end	Ø28×600	25	650×175×175
N62E0-1164	Valor LED T8 DE 18W 3000K Gen2	18W	3000K	1900lm	110lm/W	G13 cap double end	Ø28×1200	25	1250×175×175
N62E0-1165	Valor LED T8 DE 18W 4000K Gen2	18W	4000K	1900lm	110lm/W	G13 cap double end	Ø28×1200	25	1250×175×175
N62E0-1166	Valor LED T8 DE 18W 6500K Gen2	18W	6500K	1900lm	110lm/W	G13 cap double end	Ø28×1200	25	1250×175×175
N62E0-1167	Valor LED T8 DE 18W 3000K HE	18W	3000K	2500lm	140lm/W	G13 cap double end	Ø28×1200	25	1250×175×175
N62E0-1168	Valor LED T8 DE 18W 4000K HE	18W	4000K	2500lm	140lm/W	G13 cap double end	Ø28×1200	25	1250×175×175
N62E0-1169	Valor LED T8 DE 18W 6500K HE	18W	6500K	2500lm	140lm/W	G13 cap double end	Ø28×1200	25	1250×175×175
N05E0-0140	Valor LED T8 Set 18W 6500K	18W	6500K	1900lm(Tube)	110lm/W	surface mounted	1220×43×31.5	24	1260×200×250
N05E0-0142	Valor LED T8 Set 18W 4000K	18W	4000K	1900lm(Tube)	110lm/W	surface mounted	1220×43×31.5	24	1260×200×250
N05E0-0144	Valor LED T8 Set 18W 3000K	18W	3000K	1900lm(Tube)	110lm/W	surface mounted	1220×43×31.5	24	1260×200×250
N05E0-0139	Valor LED T8 Set 9W 6500K	9W	6500K	950lm(Tube)	110lm/W	surface mounted	610×43×31.5	24	660×200×250
N05E0-0141	Valor LED T8 Set 9W 4000K	9W	4000K	950lm(Tube)	110lm/W	surface mounted	610×43×31.5	24	660×200×250
N05E0-0143	Valor LED T8 Set 9W 3000K	9W	3000K	950lm(Tube)	110lm/W	surface mounted	610×43×31.5	24	660×200×250

Accessories*

Order Code	Product Description	Installation	Product Size (L×W×H mm)	Pcs/Carton	Carton Size (L*W*H mm)
N05E0-0146	T8 DE Empty Batten 600mm	surface mounted	610*35*50	30	660*190*115
N05E0-0145	T8 DE Empty Batten 1200mm	surface mounted	1220*33*50	30	1260*190*115

*Adapted to fit T8 DE tube

Duro T8 Single End Tube

Features :

- Long lifespan/2 times as fluorescent T8 tube
- High lumen efficiency/up to 115lm/w
- Higher specification for project purpose

Dimensional Drawing:

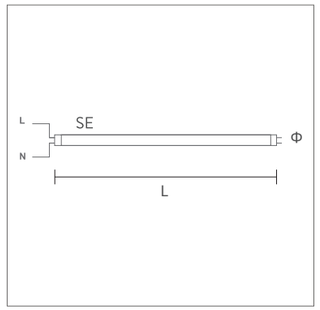

Application :

Home Office Retail Parking Supermarket Hospital

Certification :

CE CB TIS.1955-2551 EMC

Specification

AC220-240V 50/60Hz	PF >0.9	Tube Glass	CRI ⩾80	Non -Dim	Lifetime 30000h

Order Code	Product Description	Nominal Power	Color Temperature	Luminous Flux(lm/m)	Light Efficiency (lm/W)	Installation	Product Size (Φ×L mm)	Pcs/Carton	Carton Size (L*W*H mm)
N62E0-1121	Duro LED T8 SE 9W 3000K	9W	3000K	1000lm	110lm/W	G13 cap single end	Φ28×600	25	635×190×190
N62E0-1122	Duro LED T8 SE 9W 4000K	9W	4000K	1000lm	110lm/W	G13 cap single end	Φ28×600	25	635×190×190
N62E0-1123	Duro LED T8 SE 9W 6500K	9W	6500K	1000lm	110lm/W	G13 cap single end	Φ28×600	25	635×190×190
N62E0-1124	Duro LED T8 SE 18W 3000K	18W	3000K	2100lm	115lm/W	G13 cap single end	Φ28×1200	25	1245×190×190
N62E0-1125	Duro LED T8 SE 18W 4000K	18W	4000K	2100lm	115lm/W	G13 cap single end	Φ28×1200	25	1245×190×190
N62E0-1126	Duro LED T8 SE 18W 6500K	18W	6500K	2100lm	115lm/W	G13 cap single end	Φ28×1200	25	1245×190×190

Valor Downlight Gen2

Features :

- High lumen efficiency/up to 120lm/w
- Uniform lit surface with slim design
- Wide range variety/meet different needs
- Energy saving/up to 65% energy saving compared to conventional CFL downlight
- Long life/3 times more life than conventional downlight

Dimensional Drawing:

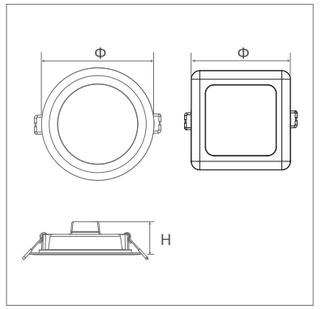

Application :

Home Retail Public area

Certification :

CE CB TIS.1955-2551 SNI SIRIM EMC

Specification

AC220-240V 50/60Hz	PF 0.5	IP 20	INSTL Recessed /Surface	CRI ⩾80	Housing PC	Non -Dim	Lifetime 20000h

Order Code	Product Description	Nominal Power	Color Temperature	Luminous Flux	Light Efficiency (lm/W)	Cutout Size(mm)	Product Size (Φ×H mm)	Pcs/Carton	Carton Size (L*W*H mm)
N03E0-1157	ValorLED DL 4W R75 3000K	4W	3000K	280lm	70lm/W	Φ70-Φ80	Φ90×33	100	475x385x215
N03E0-1158	Valor LED DL 4W R75 4000K	4W	4000K	300lm	75lm/W	Φ70-Φ80	Φ90×33	100	475x385x215
N03E0-1159	Valor LED DL 4W R75 6500K	4W	6500K	300lm	75lm/W	Φ70-Φ80	Φ90×33	100	475x385x215
N03E0-1160	Valor LED DL 6W R85 3000K	6W	3000K	550lm	95lm/W	Φ85-Φ95	Φ105×35	50	550x225x230
N03E0-1161	Valor LED DL 6W R85 4000K	6W	4000K	600lm	100lm/W	Φ85-Φ95	Φ105×35	50	550x225x230
N03E0-1162	Valor LED DL 6W R85 6500K	6W	6500K	600lm	100lm/W	Φ85-Φ95	Φ105×35	50	550x225x230
N03E0-1169	Valor LED DL 8W R100 3000K	8W	3000K	750lm	95lm/W	Φ95~Φ105	Φ115×33	30	373×252×230
N03E0-1170	Valor LED DL 8W R100 4000K	8W	4000K	800lm	100lm/W	Φ95~Φ105	Φ115×33	30	373×252×230
N03E0-1171	Valor LED DL 8W R100 6500K	8W	6500K	800lm	100lm/W	Φ95~Φ105	Φ115×33	30	373×252×230
N03E0-1172	Valor LED DL 9W R125 3000K	9W	3000K	850lm	95lm/W	Φ120~Φ130	Φ140×38	30	440×295×245

Specification

AC220-240V 50/60Hz	PF 0.5	IP 20	INSTL Recessed /Surface	CRI ⩾80	Housing PC	Non -Dim	Lifetime 20000h

Order Code	Product Description	Nominal Power	Color Temperature	Luminous Flux	Light Efficiency (lm/W)	Cutout Size(mm)	Product Size (Φ×H mm)	Pcs/Carton	Carton Size (L*W*H mm)
N03E0-1173	Valor LED DL 9W R125 4000K	9W	4000K	900lm	100lm/W	Φ120~Φ130	Φ140×38	30	440×295×245
N03E0-1174	Valor LED DL 9W R125 6500K	9W	6500K	900lm	100lm/W	Φ120~Φ130	Φ140×38	30	440×295×245
N03E0-1175	Valor LED DL 12W R125 3000K	12W	3000K	1100lm	95lm/W	Φ120~Φ130	Φ140×38	30	440×295×245
N03E0-1176	Valor LED DL 12W R125 4000K	12W	4000K	1200lm	100lm/W	Φ120~Φ130	Φ140×38	30	440×295×245
N03E0-1177	Valor LED DL 12W R125 6500K	12W	6500K	1200lm	100lm/W	Φ120~Φ130	Φ140×38	30	440×295×245
N03E0-1178	Valor LED DL 12W R150 3000K	12W	3000K	1150lm	95lm/W	Φ145~Φ155	Φ165×38	30	515×345×245
N03E0-1179	Valor LED DL 12W R150 4000K	12W	4000K	1250lm	105lm/W	Φ145~Φ155	Φ165×38	30	515×345×245
N03E0-1180	Valor LED DL 12W R150 6500K	12W	6500K	1250lm	105lm/W	Φ145~Φ155	Φ165×38	30	515×345×245
N03E0-1181	Valor LED DL 17W R150 3000K	17W	3000K	1600lm	95lm/W	Φ145~Φ155	Φ165×38	30	515×345×245
N03E0-1182	Valor LED DL 17W R150 4000K	17W	4000K	1700lm	100lm/W	Φ145~Φ155	Φ165×38	30	515×345×245
N03E0-1183	Valor LED DL 17W R150 6500K	17W	6500K	1700lm	100lm/W	Φ145~Φ155	Φ165×38	30	515×345×245
N03E0-1184	Valor LED DL 20W R175 3000K	20W	3000K	2000lm	100lm/W	Φ170~Φ180	Φ190×38	30	590×395×245
N03E0-1185	Valor LED DL 20W R175 4000K	20W	4000K	2100lm	105lm/W	Φ170~Φ180	Φ190×38	30	590×395×245
N03E0-1186	Valor LED DL 20W R175 6500K	20W	6500K	2100lm	105lm/W	Φ170~Φ180	Φ190×38	30	590×395×245
N03E0-1187	Valor LED DL 24W R200 3000K	24W	3000K	2300lm	95lm/W	Φ195~Φ205	Φ215×38	30	665×445×245
N03E0-1188	Valor LED DL 24W R200 4000K	24W	4000K	2450lm	105lm/W	Φ195~Φ205	Φ215×38	30	665×445×245
N03E0-1189	Valor LED DL 24W R200 6500K	24W	6500K	2450lm	105lm/W	Φ195~Φ205	Φ215×38	30	665×445×245
N03E0-1190	Valor LED square DL 8W S100 3000K	8W	3000K	750lm	95lm/W	□95~105	□115x34	30	371×282×225
N03E0-1191	Valor LED square DL 8W S100 4000K	8W	4000K	800lm	100lm/W	□95~105	□115x34	30	371×282×225
N03E0-1192	Valor LED square DL 8W S100 6500K	8W	6500K	800lm	100lm/W	□95~105	□115x34	30	371×282×225
N03E0-1193	Valor LED square DL 12W S150 3000K	12W	3000K	1300lm	110lm/W	□145~155	□165x34	30	527×382×240
N03E0-1194	Valor LED square DL 12W S150 4000K	12W	4000K	1400lm	120lm/W	□145~155	□165x34	30	527×382×240
N03E0-1195	Valor LED square DL 12W S150 6500K	12W	6500K	1400lm	120lm/W	□145~155	□165x34	30	527×382×240
N03E0-1196	Valor LED square DL17W S150 3000K	17W	3000K	1650lm	100lm/W	□145~155	□165x34	30	527×382×240
N03E0-1197	Valor LED square DL 17W S150 4000K	17W	4000K	1750lm	105lm/W	□145~155	□165x34	30	527×382×240
N03E0-1198	Valor LED square DL 17W S150 6500K	17W	6500K	1750lm	105lm/W	□145~155	□165x34	30	527×382×240
N03E0-1199	Valor LED square DL 24W S200 3000K	24W	3000K	2450lm	105lm/W	□195~205	□215x34	30	677×478×225
N03E0-1200	Valor LED square DL 24W S200 4000K	24W	4000K	2600lm	110lm/W	□195~205	□215x34	30	677×478×225
N03E0-1201	Valor LED square DL 24W S200 6500K	24W	6500K	2600lm	110lm/W	□195~205	□215x34	30	677×478×225

Accessories

Order Code	Product Description	Product Size (Φ×H mm)	Pcs/Carton	Carton Size (L*W*H mm)
N03E0-1114	Valor DL round surface mounting accessory ø165	Φ165×45	72	510×510×395
N03E0-1115	Valor DL round surface mounting accessory ø215	Φ215×45	48	660×432×395
N03E0-1116	Valor DL square surface mounting accessory □165	□165×45	72	510×510×395
N03E0-1117	Valor DL square surface mounting accessory □215	□215×45	48	660×432×395

CD20 Downlight

Features :

- High lumen efficiency/up to 115lm/w
- Anti-glare design with prism plate
- DOB design
- Long lifespan/30,000h
- Energy saving/up to 60% energy saving compared to conventional CFL downlight
- Flicker free

Application :

Home Hotels Retail

Specification :

AC220-240V 50/60Hz	PF 0.5	DF 0.9	INSTL Recessed	IP 20	Non -Dim
CRI ⩾80	Beam angle 100°	Lifetime 30000h			

Dimensional Drawing:

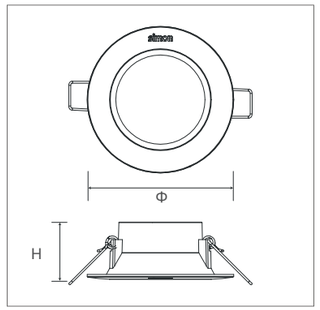

Certification : CB SASO ROHS

Order Code	Product Description	Nominal Power	Color Temperature	Luminous Flux	Light Efficiency	Cutout Size (mm)	Product Size (Φ×H mm)	Pcs/Carton	Carton Size (L*W*H mm)
N03E0-1145	CD20 LED Downlight 5W3000KΦ(68-75)	5W	3000K	370lm	74lm/W	Φ68-75	Φ90×35	48	350×300×210
N03E0-1146	CD20 LED Downlight 5W4000KΦ(68-75)	5W	4000K	390lm	78lm/W	Φ68-75	Φ90×35	48	350×300×210
N03E0-1147	CD20 LED Downlight 5W6500KΦ(68-75)	5W	6500K	390lm	78lm/W	Φ68-75	Φ90×35	48	350×300×210
N03E0-1166	CD20 LED Downlight 7W3000KΦ(68-75)	7W	3000K	490lm	70lm/W	Φ68-75	Φ90×35	48	350×300×210
N03E0-1167	CD20 LED Downlight 7W4000KΦ(68-75)	7W	4000K	515lm	73.5lm/W	Φ68-75	Φ90×35	48	350×300×210
N03E0-1168	CD20 LED Downlight 7W6500KΦ(68-75)	7W	6500K	515lm	73.5lm/W	Φ68-75	Φ90×35	48	350×300×210
N03E0-1148	CD20 LED Downlight 7W3000KΦ(85-100)	7W	3000K	615lm	88lm/W	Φ85-100	Φ110×35	48	390×350×270
N03E0-1149	CD20 LED Downlight 7W4000KΦ(85-100)	7W	4000K	635lm	90lm/W	Φ85-100	Φ110×35	48	390×350×270
N03E0-1150	CD20 LED Downlight 7W6500KΦ(85-100)	7W	6500K	635lm	90lm/W	Φ85-100	Φ110×35	48	390×350×270
N03E0-1151	CD20 LED Downlight 14W3000Φ(140-155)	14W	3000K	1220lm	88lm/W	Φ140-155	Φ166×35	24	560×350×200
N03E0-1152	CD20 LED Downlight 14W4000Φ(140-155)	14W	4000K	1285lm	92lm/W	Φ140-155	Φ166×35	24	560×350×200
N03E0-1153	CD20 LED Downlight 14W6500Φ(140-155)	14W	6500K	1285lm	92lm/W	Φ140-155	Φ166×35	24	560×350×200
N03E0-1154	CD20 LED Downlight 23W3000Φ(190-200)	23W	3000K	2500lm	109lm/W	Φ190-200	Φ218×35	12	465×265×245
N03E0-1155	CD20 LED Downlight 23W4000Φ(190-200)	23W	4000K	2625lm	115lm/W	Φ190-200	Φ218×35	12	465×265×245
N03E0-1156	CD20 LED Downlight 23W6500Φ(190-200)	23W	6500K	2625lm	115lm/W	Φ190-200	Φ218×35	12	465×265×245

Certification : CE CB TIS.1955-2551 EMC

Order Code	Product Description	Nominal Power	Color Temperature	Luminous Flux	Light Efficiency	Cutout Size (mm)	Product Size (Φ×H mm)	Pcs/Carton	Carton Size (L*W*H mm)
N03E0-1226	CD20 LED Downlight Anti-glare 3W R70 3000K	3W	3000K	230lm	80lm/W	Φ68-75	Φ90×35	48	350×300×210
N03E0-1227	CD20 LED Downlight Anti-glare 3W R70 4000K	3W	4000K	230lm	80lm/W	Φ68-75	Φ90×35	48	350×300×210
N03E0-1228	CD20 LED Downlight Anti-glare 3W R70 6500K	3W	6500K	240lm	80lm/W	Φ68-75	Φ90×35	48	350×300×210
N03E0-1229	CD20 LED Downlight Anti-glare 5W R70 3000K	5W	3000K	360lm	75lm/W	Φ68-75	Φ90×35	48	350×300×210
N03E0-1230	CD20 LED Downlight Anti-glare 5W R70 4000K	5W	4000K	360lm	75lm/W	Φ68-75	Φ90×35	48	350×300×210
N03E0-1231	CD20 LED Downlight Anti-glare 5W R70 6500K	5W	6500K	380lm	80lm/W	Φ68-75	Φ90×35	48	350×300×210
N03E0-1232	CD20 LED Downlight Anti-glare 7W R70 3000K	7W	3000K	500lm	75lm/W	Φ68-75	Φ90×35	48	350×300×210
N03E0-1233	CD20 LED Downlight Anti-glare 7W R70 4000K	7W	4000K	500lm	75lm/W	Φ68-75	Φ90×35	48	350×300×210
N03E0-1234	CD20 LED Downlight Anti-glare 7W R70 6500K	7W	6500K	530lm	80lm/W	Φ68-75	Φ90×35	48	350×300×210
N03E0-1235	CD20 LED Downlight Anti-glare 9W R100 3000K	9W	3000K	770lm	90lm/W	Φ100-110	Φ120×35	48	390×350×270
N03E0-1236	CD20 LED Downlight Anti-glare 9W R100 4000K	9W	4000K	770lm	90lm/W	Φ100-110	Φ120×35	48	390×350×270
N03E0-1237	CD20 LED Downlight Anti-glare 9W R100 6500K	9W	6500K	810lm	90lm/W	Φ100-110	Φ120×35	48	390×350×270
N03E0-1238	CD20 LED Downlight Anti-glare12W R125 3000K	12W	3000K	1020lm	85lm/W	Φ125-135	Φ148×35	24	475×350×175
N03E0-1239	CD20 LED Downlight Anti-glare 12W R125 4000K	12W	4000K	1020lm	85lm/W	Φ125-135	Φ148×35	24	475×350×175
N03E0-1240	CD20 LED Downlight Anti-glare12W R125 6500K	12W	6500K	1070lm	90lm/W	Φ125-135	Φ148×35	24	475×350×175
N03E0-1241	CD20 LED Downlight Anti-glare 16W R150 3000K	16W	3000K	1360lm	85lm/W	Φ150-160	Φ176×35	24	560×350×200
N03E0-1242	CD20 LED Downlight Anti-glare 16W R150 4000K	16W	4000K	1360lm	85lm/W	Φ150-160	Φ176×35	24	560×350×200
N03E0-1243	CD20 LED Downlight Anti-glare 16W R150 6500K	16W	6500K	1450lm	95lm/W	Φ150-160	Φ176×35	24	560×350×200
N03E0-1244	CD20 LED Downlight Anti-glare 20W R190 3000K	20W	3000K	1700lm	85lm/W	Φ190-200	Φ218×35	12	465×265×245
N03E0-1245	CD20 LED Downlight Anti-glare 20W R190 4000K	20W	4000K	1700lm	85lm/W	Φ190-200	Φ218×35	12	465×265×245
N03E0-1246	CD20 LED Downlight Anti-glare 20W R190 6500K	20W	6500K	1790lm	90lm/W	Φ190-200	Φ218×35	12	465×265×245
N03E0-1247	CD20 LED Downlight Anti-glare 24W R190 3000K	24W	3000K	2040lm	85lm/W	Φ190-200	Φ218×35	12	465×265×245
N03E0-1248	CD20 LED Downlight Anti-glare 24W R190 4000K	24W	4000K	2040lm	85lm/W	Φ190-200	Φ218×35	12	465×265×245
N03E0-1249	CD20 LED Downlight Anti-glare 24W R190 6500K	24Wt	6500K	2140lm	90lm/W	Φ190-200	Φ218×35	12	465×265×245

CP20 Spotlight

Features :

- Adjustable light angle/30° adjustment by patented gear
- Anti-glare with minimum height/UGR＜16
- Uniform beam powered by TIR lens
- Long lifespan 20,000h with plastic clad aluminum heat dissipation

Application :

Home Office Retail

Specification :

AC220-240V 50/60Hz	PF 0.5	DF 0.9	INSTL Recessed	IP 20	Non -Dim	CRI 80/90
Beam angle 25°	Adjustable light 30°	Anti -glare UGR<16	Lifetime 20000h			

Dimensional Drawing:

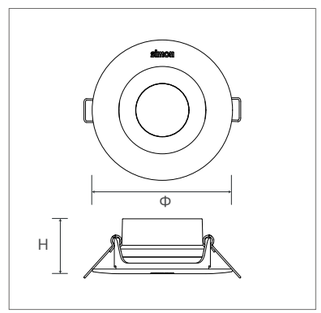

Certification : CE CB TIS.1955-2551 EMC

Order Code	Product Description	Nominal Power	Color Temperature	Luminous Flux	Light Efficiency	Cutout Size (mm)	Product Size (Φ×H mm)	Pcs/Carton	Carton Size (L*W*H mm)
N04E0-0476	CP20 LED Spotlight 3W3000KRa80	3W	3000K	245lm	85lm/W	Φ68-75	Φ90×35	48	395×300×240
N04E0-0477	CP20 LED Spotlight 3W4000KRa80	3W	4000K	260lm	90lm/W	Φ68-75	Φ90×35	48	395×300×240
N04E0-0478	CP20 LED Spotlight 3W6500KRa80	3W	6500K	260lm	90lm/W	Φ68-75	Φ90×35	48	395×300×240
N04E0-0479	CP20 LED Spotlight 3W3000KRa90	3W	3000K	215lm	75lm/W	Φ68-75	Φ90×35	48	395×300×240
N04E0-0480	CP20 LED Spotlight 3W4000KRa90	3W	4000K	230lm	80lm/W	Φ68-75	Φ90×35	48	395×300×240
N04E0-0481	CP20 LED Spotlight 3W6500KRa90	3W	6500K	230lm	80lm/W	Φ68-75	Φ90×35	48	395×300×240
N04E0-0529	CP20 LED Spotlight 5W3000KRa80	5W	3000K	400lm	80lm/W	Φ68-75	Φ90×35	48	395×300×240
N04E0-0530	CP20 LED Spotlight 5W4000KRa80	5W	4000K	420lm	85lm/W	Φ68-75	Φ90×35	48	395×300×240
N04E0-0531	CP20 LED Spotlight 5W6500KRa80	5W	6500K	420lm	85lm/W	Φ68-75	Φ90×35	48	395×300×240
N04E0-0485	CP20 LED Spotlight 5W3000KRa90	5W	3000K	300lm	60lm/W	Φ68-75	Φ90×35	48	395×300×240
N04E0-0486	CP20 LED Spotlight 5W4000KRa90	5W	4000K	320lm	65lm/W	Φ68-75	Φ90×35	48	395×300×240
N04E0-0487	CP20 LED Spotlight 5W6500KRa90	5W	6500K	320lm	65lm/W	Φ68-75	Φ90×35	48	395×300×240
N04E0-0532	CP20 LED Spotlight 7W3000KRa80	7W	3000K	560lm	80lm/W	Φ68-75	Φ90×35	48	395×300×240
N04E0-0533	CP20 LED Spotlight 7W4000KRa80	7W	4000K	590lm	85lm/W	Φ68-75	Φ90×35	48	395×300×240
N04E0-0534	CP20 LED Spotlight 7W6500KRa80	7W	6500K	590lm	85lm/W	Φ68-75	Φ90×35	48	395×300×240
N04E0-0491	CP20 LED Spotlight 7W3000KRa90	7W	3000K	440lm	65lm/W	Φ68-75	Φ90×35	48	395×300×240
N04E0-0492	CP20 LED Spotlight 7W4000KRa90	7W	4000K	470lm	70lm/W	Φ68-75	Φ90×35	48	395×300×240
N04E0-0493	CP20 LED Spotlight 7W6500KRa90	7W	6500K	470lm	70lm/W	Φ68-75	Φ90×35	48	395×300×240
N04E0-0494	CP20 LED Spotlight 12W3000KRa80	12W	3000K	950lm	80lm/W	Φ100-105	Φ117×52	12	390×285×180
N04E0-0495	CP20 LED Spotlight 12W4000KRa80	12W	4000K	1000lm	85lm/W	Φ100-105	Φ117×52	12	390×285×180
N04E0-0496	CP20 LED Spotlight 12W6500KRa80	12W	6500K	1000lm	85lm/W	Φ100-105	Φ117×52	12	390×285×180

Certification : CB SASO ROHS

Order Code	Product Description	Nominal Power	Color Temperature	Luminous Flux	Light Efficiency	Cutout Size (mm)	Product Size (Φ×H mm)	Pcs/Carton	Carton Size (L*W*H mm)
N04E0-0482	CP20 LED Spotlight 5W3000KRa80Φ(68-75)	5W	3000K	400lm	80lm/W	Φ68-75	Φ90×35	48	395×300×240
N04E0-0483	CP20 LED Spotlight 5W4000KRa80Φ(68-75)	5W	4000K	420lm	84lm/W	Φ68-75	Φ90×35	48	395×300×240
N04E0-0484	CP20 LED Spotlight 5W6500KRa80Φ(68-75)	5W	6500K	420lm	86lm/W	Φ68-75	Φ90×35	48	395×300×240
N04E0-0488	CP20 LED Spotlight 7W3000KRa80Φ(68-75)	7W	3000K	560lm	80lm/W	Φ68-75	Φ90×35	48	395×300×240
N04E0-0489	CP20 LED Spotlight 7W4000KRa80Φ(68-75)	7W	4000K	590lm	84lm/W	Φ68-75	Φ90×35	48	395×300×240
N04E0-0490t	CP20 LED Spotlight 7W6500KRa80Φ(68-75)	7W	6500Kt	590lm	84lm/W	Φ68-75	Φ90×35	48	395×300×240

KC1 Spotlight

Features :

- Excellent chip/Splendid COB, CRI>90,R9>0
- Constant current driver with anti-over-voltage and short circuit protection
- Various structure/multiple module,match with 30 kinds of frames
- Exact lighting distribution/Lens+reflector secondary optical design: TIR anti-osmotic lens;Various beam angle,minimum to 10
- Simon smart enabled

Application :

Home Hotels Restaurant

Dimensional Drawing:

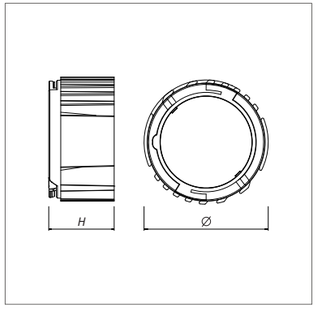

Specification

AC220-240V 50/60Hz	PF 0.5 PF 0.9 (TRIAC 12W 15W)	INSTL Recessed	IP 20	Die Casting Alu heat sink	CRI ⩾90	Finishes Black	Anti -glare

Order Code	Product Description	Nominal Power	Color Temperture	Beam Angle	Luminous Flux	Light Efficiency	Lifetime	Dimmable	Product Size (Φ×H mm)	Pcs /Carton	Carton Size (L*W*H mm)
N0424-1838	Duro LED-KC1 Module 5W2700K15°	5W	2700K	15°	350lm	70lm/W	50000h	/	φ57*32	48	365×340×250
N0424-1839	Duro LED-KC1 Module 5W3000K15°	5W	3000K	15°	360lm	75lm/W	50000h	/	φ57*32	48	365×340×250
N0424-1840	Duro LED-KC1 Module 5W4000K15°	5W	4000K	15°	370lm	75lm/W	50000h	/	φ57*32	48	365×340×250
N0424-1841	Duro LED-KC1 Module 5W2700K24°	5W	2700K	24°	350lm	70lm/W	50000h	/	φ57*32	48	365×340×250
N0424-1842	Duro LED-KC1 Module 5W3000K24°	5W	3000K	24°	360lm	75lm/W	50000h	/	φ57*32	48	365×340×250
N0424-1844	Duro LED-KC1 Module 5W4000K24°	5W	4000K	24°	370lm	75lm/W	50000h	/	φ57*32	48	365×340×250
N0424-1845	Duro LED-KC1 Module 5W2700K36°	5W	2700K	36°	350lm	70lm/W	50000h	/	φ57*32	48	365×340×250
N0424-1846	Duro LED-KC1 Module 5W3000K36°	5W	3000K	36°	360lm	75lm/W	50000h	/	φ57*32	48	365×340×250
N0424-1848	Duro LED-KC1 Module 5W4000K36°	5W	4000K	36°	370lm	75lm/W	50000h	/	φ57*32	48	365×340×250
N0424-1849	Duro LED-KC1 Module 5W2700K60°	5W	2700K	60°	350lm	70lm/W	50000h	/	φ57*32	48	365×340×250
N0424-1850	Duro LED-KC1 Module 5W3000K60°	5W	3000K	60°	360lm	75lm/W	50000h	/	φ57*32	48	365×340×250
N0424-1851	Duro LED-KC1 Module 5W4000K60°	5W	4000K	60°	370lm	75lm/W	50000h	/	φ57*32	48	365×340×250
N04E0-0535	Duro LED-KC1 Module TRIAC 5W2700K15°	5W	2700K	15°	350lm	70lm/W	50000h	TRIAC	φ57*32	48	365×340×250
N0424-2084	Duro LED-KC1 Module TRIAC 5W3000K15°	5W	3000K	15°	360lm	75lm/W	50000h	TRIAC	φ57*32	48	365×340×250
N0424-3082	Duro LED-KC1 Module TRIAC 5W4000K15°	5W	4000K	15°	370lm	75lm/W	50000h	TRIAC	φ57*32	48	365×340×250
N04E0-0536	Duro LED-KC1 Module TRIAC 5W2700K24°	5W	2700K	24°	350lm	70lm/W	50000h	TRIAC	φ57*32	48	365×340×250
N0424-3083	Duro LED-KC1 Module TRIAC 5W3000K24°	5W	3000K	24°	360lm	75lm/W	50000h	TRIAC	φ57*32	48	365×340×250
N0424-3084	Duro LED-KC1 Module TRIAC 5W4000K24°	5W	4000K	24°	370lm	75lm/W	50000h	TRIAC	φ57*32	48	365×340×250
N04E0-0537	Duro LED-KC1 Module TRIAC 5W2700K36°	5W	2700K	36°	350lm	70lm/W	50000h	TRIAC	φ57*32	48	365×340×250
N0424-3085	Duro LED-KC1 Module TRIAC 5W3000K36°	5W	3000K	36°	360lm	75lm/W	50000h	TRIAC	φ57*32	48	365×340×250
N0424-3086	Duro LED-KC1 Module TRIAC 5W4000K36°	5W	4000K	36°	370lm	75lm/W	50000h	TRIAC	φ57*32	48	365×340×250
N04E0-0538	Duro LED-KC1 Module TRIAC 5W2700K60°	5W	2700K	60°	350lm	70lm/W	50000h	TRIAC	φ57*32	48	365×340×250
N0424-3087	Duro LED-KC1 Module TRIAC 5W3000K60°	5W	3000K	60°	360lm	75lm/W	50000h	TRIAC	φ57*32	48	365×340×250
N0424-3088	Duro LED-KC1 Module TRIAC 5W4000K60°	5W	4000K	60°	370lm	75lm/W	50000h	TRIAC	φ57*32	48	365×340×250
N0424-1852	Duro LED-KC1 Module 7W2700K15°	7W	2700K	15°	455lm	65lm/W	50000h	/	φ57*32	48	365×340×250
N0424-1853	Duro LED-KC1 Module 7W3000K15°	7W	3000K	15°	470lm	70lm/W	50000h	/	φ57*32	48	365×340×250
N0424-1887	Duro LED-KC1 Module 7W4000K15°	7W	4000K	15°	480lm	70lm/W	50000h	/	φ57*32	48	365×340×250
N0424-1888	Duro LED-KC1 Module 7W2700K24°	7W	2700K	24°	455lm	65lm/W	50000h	/	φ57*32	48	365×340×250
N0424-1889	Duro LED-KC1 Module 7W3000K24°	7W	3000K	24°	470lm	70lm/W	50000h	/	φ57*32	48	365×340×250
N0424-1891	Duro LED-KC1 Module 7W4000K24°	7W	4000K	24°	480lm	70lm/W	50000h	/	φ57*32	48	365×340×250
N0424-1892	Duro LED-KC1 Module 7W2700K36°	7W	2700K	36°	455lm	65lm/W	50000h	/	φ57*32	48	365×340×250

LIGHTING
Duro KC1 Spotlight

Order Code	Product Description	Nominal Power	Color Temperture	Beam Angle	Luminous Flux	Light Efficiency	Lifetime	Dimmable	Product Size (Φ×H mm)	Pcs /Carton	Carton Size (L*W*H mm)
N0424-1893	Duro LED-KC1 Module 7W3000K36°	7W	3000K	36°	470lm	70lm/W	50000h	/	φ57*32	48	365×340×250
N0424-1895	Duro LED-KC1 Module 7W4000K36°	7W	4000K	36°	480lm	70lm/W	50000h	/	φ57*32	48	365×340×250
N0424-2043	Duro LED-KC1 Module 7W2700K60°	7W	2700K	60°	455lm	65lm/W	50000h	/	φ57*32	48	365×340×250
N0424-2044	Duro LED-KC1 Module 7W3000K60°	7W	3000K	60°	470lm	70lm/W	50000h	/	φ57*32	48	365×340×250
N0424-2045	Duro LED-KC1 Module 7W4000K60°	7W	4000K	60°	480lm	70lm/W	50000h	/	φ57*32	48	365×340×250
N04E0-0539	Duro LED-KC1 Module TRIAC 7W2700K15°	7W	2700K	15°	455lm	65lm/W	50000h	TRIAC	φ57*32	48	365×340×250
N0424-3089	Duro LED-KC1 Module TRIAC 7W3000K15°	7W	3000K	15°	470lm	70lm/W	50000h	TRIAC	φ57*32	48	365×340×250
N0424-3090	Duro LED-KC1 Module TRIAC 7W4000K15°	7W	4000K	15°	480lm	70lm/W	50000h	TRIAC	φ57*32	48	365×340×250
N04E0-0540	Duro LED-KC1 Module TRIAC 7W2700K24°	7W	2700K	24°	455lm	65lm/W	50000h	TRIAC	φ57*32	48	365×340×250
N0424-3091	Duro LED-KC1 Module TRIAC 7W3000K24°	7W	3000K	24°	470lm	70lm/W	50000h	TRIAC	φ57*32	48	365×340×250
N0424-3092	Duro LED-KC1 Module TRIAC 7W4000K24°	7W	4000K	24°	480lm	70lm/W	50000h	TRIAC	φ57*32	48	365×340×250
N04E0-0541	Duro LED-KC1 Module TRIAC 7W2700K36°	7W	2700K	36°	455lm	65lm/W	50000h	TRIAC	φ57*32	48	365×340×250
N0424-3093	Duro LED-KC1 Module TRIAC 7W3000K36°	7W	3000K	36°	470lm	70lm/W	50000h	TRIAC	φ57*32	48	365×340×250
N0424-3094	Duro LED-KC1 Module TRIAC 7W4000K36°	7W	4000K	36°	480lm	70lm/W	50000h	TRIAC	φ57*32	48	365×340×250
N04E0-0542	Duro LED-KC1 Module TRIAC 7W2700K60°	7W	2700K	60°	455lm	65lm/W	50000h	TRIAC	φ57*32	48	365×340×250
N0424-3095	Duro LED-KC1 Module TRIAC 7W3000K60°	7W	3000K	60°	470lm	70lm/W	50000h	TRIAC	φ57*32	48	365×340×250
N0424-3096	Duro LED-KC1 Module TRIAC 7W4000K60°	7W	4000K	60°	480lm	70lm/W	50000h	TRIAC	φ57*32	48	365×340×250
N0424-2046	Duro LED-KC1 Module 9W2700K15°	9W	2700K	15°	670lm	75lm/W	50000h	/	φ57*45	48	365×340×250
N0424-2047	Duro LED-KC1 Module 9W3000K15°	9W	3000K	15°	690lm	80lm/W	50000h	/	φ57*45	48	365×340×250
N0424-2048	Duro LED-KC1 Module 9W4000K15°	9W	4000K	15°	710lm	80lm/W	50000h	/	φ57*45	48	365×340×250
N0424-2049	Duro LED-KC1 Module 9W2700K24°	9W	2700K	24°	670lm	75lm/W	50000h	/	φ57*45	48	365×340×250
N0424-2050	Duro LED-KC1 Module 9W3000K24°	9W	3000K	24°	690lm	80lm/W	50000h	/	φ57*45	48	365×340×250
N0424-2052	Duro LED-KC1 Module 9W4000K24°	9W	4000K	24°	710lm	80lm/W	50000h	/	φ57*45	48	365×340×250
N0424-2053	Duro LED-KC1 Module 9W2700K36°	9W	2700K	36°	670lm	75lm/W	50000h	/	φ57*45	48	365×340×250
N0424-2054	Duro LED-KC1 Module 9W3000K36°	9W	3000K	36°	690lm	80lm/W	50000h	/	φ57*45	48	365×340×250
N0424-2056	Duro LED-KC1 Module 9W4000K36°	9W	4000K	36°	710lm	80lm/W	50000h	/	φ57*45	48	365×340×250
N0424-2057	Duro LED-KC1 Module 9W2700K60°	9W	2700K	60°	670lm	75lm/W	50000h	/	φ57*45	48	365×340×250
N0424-2058	Duro LED-KC1 Module 9W3000K60°	9W	3000K	60°	690lm	80lm/W	50000h	/	φ57*45	48	365×340×250
N0424-2059	Duro LED-KC1 Module 9W4000K60°	9W	4000K	60°	710lm	80lm/W	50000h	/	φ57*45	48	365×340×250
N04E0-0543	Duro LED-KC1 Module TRIAC 9W2700K15°	9W	2700K	15°	670lm	75lm/W	50000h	TRIAC	φ57*45	48	365×340×250
N0424-3097	Duro LED-KC1 Module TRIAC 9W3000K15°	9W	3000K	15°	690lm	80lm/W	50000h	TRIAC	φ57*45	48	365×340×250
N0424-3098	Duro LED-KC1 Module TRIAC 9W4000K15°	9W	4000K	15°	710lm	80lm/W	50000h	TRIAC	φ57*45	48	365×340×250
N04E0-0544	Duro LED-KC1 Module TRIAC 9W2700K24°	9W	2700K	24°	670lm	75lm/W	50000h	TRIAC	φ57*45	48	365×340×250
N0424-3099	Duro LED-KC1 Module TRIAC 9W3000K24°	9W	3000K	24°	690lm	80lm/W	50000h	TRIAC	φ57*45	48	365×340×250

Order Code	Product Description	Nominal Power	Color Temperture	Beam Angle	Luminous Flux	Light Efficiency	Lifetime	Dimmable	Product Size (Φ×H mm)	Pcs /Carton	Carton Size (L*W*H mm)
N0424-3100	Duro LED-KC1 Module TRIAC 9W4000K24°	9W	4000K	24°	710lm	80lm/W	50000h	TRIAC	φ57*45	48	365×340×250
N04E0-0545	Duro LED-KC1 Module TRIAC 9W2700K36°	9W	2700K	36°	670lm	75lm/W	50000h	TRIAC	φ57*45	48	365×340×250
N0424-3101	Duro LED-KC1 Module TRIAC 9W3000K36°	9W	3000K	36°	690lm	80lm/W	50000h	TRIAC	φ57*45	48	365×340×250
N0424-3102	Duro LED-KC1 Module TRIAC 9W4000K36°	9W	4000K	36°	710lm	80lm/W	50000h	TRIAC	φ57*45	48	365×340×250
N04E0-0546	Duro LED-KC1 Module TRIAC 9W2700K60°	9W	2700K	60°	670lm	75lm/W	50000h	TRIAC	φ57*45	48	365×340×250
N0424-3103	Duro LED-KC1 Module TRIAC 9W3000K60°	9W	3000K	60°	690lm	80lm/W	50000h	TRIAC	φ57*45	48	365×340×250
N0424-3104	Duro LED-KC1 Module TRIAC 9W4000K60°	9W	4000K	60°	710lm	80lm/W	50000h	TRIAC	φ57*45	48	365×340×250
N0424-2060	Duro LED-KC1 Module 12W2700K15°	12W	2700K	15°	880lm	75lm/W	30000h	/	φ57*45	48	365×340×250
N0424-2061	Duro LED-KC1 Module 12W3000K15°	12W	3000K	15°	910lm	80lm/W	30000h	/	φ57*45	48	365×340×250
N0424-2062	Duro LED-KC1 Module 12W4000K15°	12W	4000K	15°	930lm	80lm/W	30000h	/	φ57*45	48	365×340×250
N0424-2063	Duro LED-KC1 Module 12W2700K24°	12W	2700K	24°	880lm	75lm/W	30000h	/	φ57*45	48	365×340×250
N0424-2064	Duro LED-KC1 Module 12W3000K24°	12W	3000K	24°	910lm	80lm/W	30000h	/	φ57*45	48	365×340×250
N0424-2065	Duro LED-KC1 Module 12W4000K24°	12W	4000K	24°	930lm	80lm/W	30000h	/	φ57*45	48	365×340×250
N0424-2066	Duro LED-KC1 Module 12W2700K36°	12W	2700K	36°	880lm	75lm/W	30000h	/	φ57*45	48	365×340×250
N0424-2067	Duro LED-KC1 Module 12W3000K36°	12W	3000K	36°	910lm	80lm/W	30000h	/	φ57*45	48	365×340×250
N0424-2068	Duro LED-KC1 Module 12W4000K36°	12W	4000K	36°	930lm	80lm/W	30000h	/	φ57*45	48	365×340×250
N0424-2069	Duro LED-KC1 Module 12W2700K60°	12W	2700K	60°	880lm	75lm/W	30000h	/	φ57*45	48	365×340×250
N0424-2070	Duro LED-KC1 Module 12W3000K60°	12W	3000K	60°	910lm	80lm/W	30000h	/	φ57*45	48	365×340×250
N0424-2071	Duro LED-KC1 Module 12W4000K60°	12W	4000K	60°	930lm	80lm/W	30000h	/	φ57*45	48	365×340×250
N04E0-0547	Duro LED-KC1 Module TRIAC 12W2700K15°	12W	2700K	15°	880lm	75lm/W	30000h	TRIAC	φ57*45	48	425×385×320
N0424-3105	Duro LED-KC1 Module TRIAC 12W3000K15°	12W	3000K	15°	910lm	80lm/W	30000h	TRIAC	φ57*45	48	425×385×320
N0424-3106	Duro LED-KC1 Module TRIAC 12W4000K15°	12W	4000K	15°	930lm	80lm/W	30000h	TRIAC	φ57*45	48	425×385×320
N04E0-0548	Duro LED-KC1 Module TRIAC 12W2700K24°	12W	2700K	24°	880lm	75lm/W	30000h	TRIAC	φ57*45	48	425×385×320
N0424-3107	Duro LED-KC1 Module TRIAC 12W3000K24°	12W	3000K	24°	910lm	80lm/W	30000h	TRIAC	φ57*45	48	425×385×320
N0424-3108	Duro LED-KC1 Module TRIAC 12W4000K24°	12W	4000K	24°	930lm	80lm/W	30000h	TRIAC	φ57*45	48	425×385×320
N04E0-0549	Duro LED-KC1 Module TRIAC 12W2700K36°	12W	2700K	36°	880lm	75lm/W	30000h	TRIAC	φ57*45	48	425×385×320
N0424-3109	Duro LED-KC1 Module TRIAC 12W3000K36°	12W	3000K	36°	910lm	80lm/W	30000h	TRIAC	φ57*45	48	425×385×320
N0424-3110	Duro LED-KC1 Module TRIAC 12W4000K36°	12W	4000K	36°	930lm	80lm/W	30000h	TRIAC	φ57*45	48	425×385×320
N04E0-0550	Duro LED-KC1 Module TRIAC 12W2700K60°	12W	2700K	60°	880lm	75lm/W	30000h	TRIAC	φ57*45	48	425×385×320
N0424-3111	Duro LED-KC1 Module TRIAC 12W3000K60°	12W	3000K	60°	910lm	80lm/W	30000h	TRIAC	φ57*45	48	425×385×320
N0424-3112	Duro LED-KC1 Module TRIAC 12W4000K60°	12W	4000K	60°	930lm	80lm/W	30000h	TRIAC	φ57*45	48	425×385×320
N0424-2072	Duro LED-KC1 Module 15W2700K15°	15W	2700K	15°	1060lm	70lm/W	30000h	/	φ57*57	48	365×340×290
N0424-2073	Duro LED-KC1 Module 15W3000K15°	15W	3000K	15°	1110lm	75lm/W	30000h	/	φ57*57	48	365×340×290
N0424-2074	Duro LED-KC1 Module 15W4000K15°	15W	4000K	15°	1120lm	75lm/W	30000h	/	φ57*57	48	365×340×290

Order Code	Product Description	Nominal Power	Color Temperture	Beam Angle	Luminous Flux	Light Efficiency	Lifetime	Dimmable	Product Size (Φ×H mm)	Pcs /Carton	Carton Size (L*W*H mm)
N0424-2075	Duro LED-KC1 Module 15W2700K24°	15W	2700K	24°	1060lm	70lm/W	30000h	/	φ57*57	48	365×340×290
N0424-2076	Duro LED-KC1 Module 15W3000K24°	15W	3000K	24°	1110lm	75lm/W	30000h	/	φ57*57	48	365×340×290
N0424-2077	Duro LED-KC1 Module 15W4000K24°	15W	4000K	24°	1120lm	75lm/W	30000h	/	φ57*57	48	365×340×290
N0424-2078	Duro LED-KC1 Module 15W2700K36°	15W	2700K	36°	1060lm	70lm/W	30000h	/	φ57*57	48	365×340×290
N0424-2079	Duro LED-KC1 Module 15W3000K36°	15W	3000K	36°	1110lm	75lm/W	30000h	/	φ57*57	48	365×340×290
N0424-2080	Duro LED-KC1 Module 15W4000K36°	15W	4000K	36°	1120lm	75lm/W	30000h	/	φ57*57	48	365×340×290
N0424-2081	Duro LED-KC1 Module 15W2700K60°	15W	2700K	60°	1060lm	70lm/W	30000h	/	φ57*57	48	365×340×290
N0424-2082	Duro LED-KC1 Module 15W3000K60°	15W	3000K	60°	1110lm	75lm/W	30000h	/	φ57*57	48	365×340×290
N0424-2083	Duro LED-KC1 Module 15W4000K60°	15W	4000K	60°	1120lm	75lm/W	30000h	/	φ57*57	48	365×340×290
N04E0-0551	Duro LED-KC1 Module TRIAC 15W2700K15°	15W	2700K	15°	1060lm	70lm/W	30000h	TRIAC	φ57*57	48	425×385×320
N04E0-0552	Duro LED-KC1 Module TRIAC 15W3000K15°	15W	3000K	15°	1110lm	75lm/W	30000h	TRIAC	φ57*57	48	425×385×320
N04E0-0553	Duro LED-KC1 Module TRIAC 15W4000K15°	15W	4000K	15°	1120lm	75lm/W	30000h	TRIAC	φ57*57	48	425×385×320
N04E0-0554	Duro LED-KC1 Module TRIAC 15W2700K24°	15W	2700K	24°	1060lm	70lm/W	30000h	TRIAC	φ57*57	48	425×385×320
N04E0-0555	Duro LED-KC1 Module TRIAC 15W3000K24°	15W	3000K	24°	1110lm	75lm/W	30000h	TRIAC	φ57*57	48	425×385×320
N04E0-0556	Duro LED-KC1 Module TRIAC 15W4000K24°	15W	4000K	24°	1120lm	75lm/W	30000h	TRIAC	φ57*57	48	425×385×320
N04E0-0557	Duro LED-KC1 Module TRIAC 15W2700K36°	15W	2700K	36°	1060lm	70lm/W	30000h	TRIAC	φ57*57	48	425×385×320
N04E0-0558	Duro LED-KC1 Module TRIAC 15W3000K36°	15W	3000K	36°	1110lm	75lm/W	30000h	TRIAC	φ57*57	48	425×385×320
N04E0-0559	Duro LED-KC1 Module TRIAC 15W4000K36°	15W	4000K	36°	1120lm	75lm/W	30000h	TRIAC	φ57*57	48	425×385×320
N04E0-0560	Duro LED-KC1 Module TRIAC 15W2700K60°	15W	2700K	60°	1060lm	70lm/W	30000h	TRIAC	φ57*57	48	425×385×320
N04E0-0561	Duro LED-KC1 Module TRIAC 15W3000K60°	15W	3000K	60°	1110lm	75lm/W	30000h	TRIAC	φ57*57	48	425×385×320
N04E0-0562	Duro LED-KC1 Module TRIAC 15W4000K60°	15W	4000K	60°	1120lm	75lm/W	30000h	TRIAC	φ57*57	48	425×385×320

Order Code	Product Description	Finishing	Cutout Size (mm)	Product Size (L×W×H mm)	Pcs /Carton	Carton Size (L*W*H mm)
N0424-1651	Duro KC1 IP44 frame	white	Φ75	Φ82*38.5	48	390×345×210
N0424-0231	Duro KC1 ivory 10° anti-glare frame	ivory	Φ75	Φ85*23	48	390×285×210
N0424-0232	Duro KC1 ivory 30° anti-glare frame	ivory	Φ75	Φ85*30	48	390×285×210
N0424-0233	Duro KC1 black 10° anti-glare frame	black	Φ75	Φ85*23	48	390×285×210
N0424-0234	Duro KC1 black 30° anti-glare frame	black	Φ75	Φ85*30	48	390×285×210
N0424-0271	Duro KC1 round frame	White	Φ75	Φ85*32	48	390×285×210
N0424-0272	Duro KC1 oval frame	White	Φ75	Φ85*32	48	390×285×210

Order Code	Product Description	Finishing	Cutout Size (mm)	Product Size (L×W×H mm)	Pcs /Carton	Carton Size (L*W*H mm)
N0424-0273	Duro KC1 ivory 10° anti-glare square frame	ivory	Φ75	85*85*23	48	390×345×210
N0424-0274	Duro KC1 ivory 30° anti-glare square frame	ivory	Φ75	85*85*30	48	390×345×210
N0424-0275	Duro KC1 black 10° anti-glare square frame	black	Φ75	85*85*23	48	390×345×210
N0424-0276	Duro KC1 black 30° anti-glare square frame	black	Φ75	85*85*30	48	390×345×210
N0424-0277	Duro KC1 round embedded frame	White	Φ90	Φ80*35	48	495×395×240
N0424-0278	Duro KC1 square embedded frame	White	90*90	86*86*35	48	495×395×240

Order Code	Product Description	Finishing	Cutout Size (mm)	Product Size (L×W×H mm)	Pcs /Carton	Carton Size (L*W*H mm)
N0424-0279	Duro KC1 single flat grid frame	White	Φ85	97.5*97.5*30	48	390×375×240
N0424-0280	Duro KC1 double flat grid frame	White	85*190	97.5*205*30	24	445×375×200
N0424-0281	Duro KC1 triple flat grid frame	White	85*300	97.5*312.5*30	12	375×340×200
N0424-0282	Duro KC1 single anti-glare grid frame	White	100*100	115*115*45	48	510×420×270
N0424-0283	Duro KC1 double anti-glare grid frame	White	100*220	115*237*45	24	515×420×260
N0424-0284	Duro KC1 triple anti-glare grid frame	White	100*330	115*344*45	12	135×60×355

Order Code	Product Description	Finishing	Cutout Size (mm)	Product Size (L×W×H mm)	Pcs /Carton	Carton Size (L*W*H mm)
N0424-0391	Duro KC1 White anti-glare plastic frame	White	Φ75	Φ90*30	48	390×345×210
N0424-0392	Duro KC1 black anti-glare plastic frame	black	Φ75	Φ90*30	48	390×345×210
N0424-0393	Duro KC1 silver anti-glare plastic frame	silver	Φ75	Φ90*30	48	390×345×210
N0424-0394	Duro KC1 champagne anti-glare plastic frame	champagne	Φ75	Φ90*30	48	390×345×210
N0424-0395	Duro KC1 rose gold anti-glare plastic frame	rose gold	Φ75	Φ90*30	48	390×345×210
N0424-0430	Duro KC1 shining black anti-glare metal frame	black	Φ75	Φ85*30	48	390×345×210
N0424-0431	Duro KC1 matt silver anti-glare metal frame	silver	Φ75	Φ85*30	48	390×345×210
N0424-0433	Duro KC1 shining black anti-glare plastic frame	black	Φ75	Φ85*30	48	390×345×210
N0424-0434	Duro KC1 matt silver anti-glare plastic frame	silver	Φ75	Φ85*30	48	390×345×210
N0424-1655	Duro KC1 shining black frame	black	Φ75	Φ85*40.5	48	410×375×320
N0424-1654	Duro KC1 shining silver frame	silver	Φ75	Φ85*40.5	48	410×375×320

RS22 Track Spotlight

Features :

- A clean and compact outlook design with inside track driver
- Basic range track spotlight for retail application
- Flexible adjustment horizontally and vertically
- Excellent punch-effect light quality

Application :

Home Retail

Certification :

CE CB TIS.1955-2551 EMC

Dimensional Drawing:

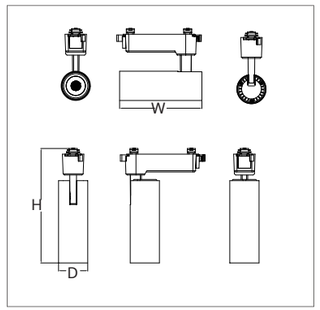

Specification :

AC220-240V 50/60Hz | PF 0.5 | Non -Dim | INSTL Track | CRI 80 | Lifetime 25000h

Order Code	Product Description	Nominal Power	Color Temperature	Luminous Flux	Max light intensity(Imax)	Product Size (D×W×H mm)	Pcs/Carton	Carton Size (L*W*H mm)
N64E0-0001	RS22 LED tracklight(2 wires)10W 3000K 24°WH	10W	3000K	850lm	2600cd	D49×W127×H192	48	540×305×350
N64E0-0002	RS22 LED tracklight(2 wires)10W 3000K 24°BK	10W	3000K	850lm	2600cd	D49×W127×H192	48	540×305×350
N64E0-0003	RS22 LED tracklight(2 wires)10W 4000K 24°WH	10W	4000K	900lm	2600cd	D49×W127×H192	48	540×305×350
N64E0-0004	RS22 LED tracklight(2 wires)10W 4000K 24°BK	10W	4000K	900lm	2600cd	D49×W127×H192	48	540×305×350
N64E0-0005	RS22 LED tracklight(2 wires)10W 6500K 24°WH	10W	6500K	900lm	2600cd	D49×W127×H192	48	540×305×350
N64E0-0006	RS22 LED tracklight(2 wires)10W 6500K 24°BK	10W	6500K	900lm	2600cd	D49×W127×H192	48	540×305×350
N64E0-0007	RS22 LED tracklight(2 wires)20W 3000K 24°WH	20W	3000K	1700lm	6000cd	D65×W127×H212	30	455×345×370
N64E0-0008	RS22 LED tracklight(2 wires)20W 3000K 24°BK	20W	3000K	1700lm	6000cd	D65×W127×H212	30	455×345×370
N64E0-0009	RS22 LED tracklight(2 wires)20W 4000K 24°WH	20W	4000K	1800lm	6000cd	D65×W127×H212	30	455×345×370
N64E0-0010	RS22 LED tracklight(2 wires)20W 4000K 24°BK	20W	4000K	1800lm	6000cd	D65×W127×H212	30	455×345×370
N64E0-0011	RS22 LED tracklight(2 wires)20W 6500K 24°WH	20W	6500K	1800lm	6000cd	D65×W127×H212	30	455×345×370
N64E0-0012	RS22 LED tracklight(2 wires)20W 6500K 24°BK	20W	6500K	1800lm	6000cd	D65×W127×H212	30	455×345×370
N64E0-0013	RS22 LED tracklight(2 wires)30W 3000K 24°WH	30W	3000K	2550lm	9500cd	D76×W127×H232	24	490×385×340
N64E0-0014	RS22 LED tracklight(2 wires)30W 3000K 24°BK	30W	3000K	2550lm	9500cd	D76×W127×H232	24	490×385×340
N64E0-0015	RS22 LED tracklight(2 wires)30W 4000K 24°WH	30W	4000K	2700lm	9500cd	D76×W127×H232	24	490×385×340
N64E0-0016	RS22 LED tracklight(2 wires)30W 4000K 24°BK	30W	4000K	2700lm	9500cd	D76×W127×H232	24	490×385×340
N64E0-0017	RS22 LED tracklight(2 wires)30W 6500K 24°WH	30W	6500K	2700lm	9500cd	D76×W127×H232	24	490×385×340
N64E0-0018	RS22 LED tracklight(2 wires)30W 6500K 24°BK	30W	6500K	2700lm	9500cd	D76×W127×H232	24	490×385×340

Accessories :

Order Code	Product Description	Product Size (D×W×H mm)	Pcs/Carton	Carton Size (L*W*H mm)
N66E0-0007	2 Wires (L-N) Track-1 meter-WH	1000*34*18	30	1010x180x102
N66E0-0009	2 Wires (L-N) Track-2 meters-WH	2000*34*18	30	1010x180x102
N66E0-0010	2 Wires (L-N) Track-1 meter-BK	1000*34*18	30	2010x180x102
N66E0-0012	2 Wires (L-N) Track-2 meters-BK	2000*34*18	30	2010x180x102
N66E0-0013	Linear Connector(L-N)-WH	35*16*34	100	1950x175x110
N66E0-0014	Linear Connector(L-N)-BK	35*16*34	100	1950x175x110
N66E0-0015	L Connector(L-N)-WH	78*78*17	100	2750x255x180
N66E0-0016	L Connector(L-N)-BK	78*78*17	100	2750x255x180

Valor T5 Batten

Features :

- High lumen efficiency/up to 100lm/w
- Energy saving/up to 55% energy savings compared to conventional T5 batten
- Easy installation
- Multiple choice/broad range of lengths and color Temperatures

Dimensional Drawing:

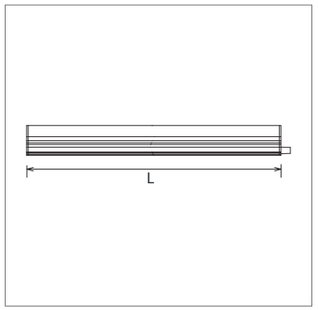

Application :

Home Office Retail Hotel

Certification :

CE CB TIS.1955-2551 SIRIM EMC

Specification

AC220-240V	PF	IP	INSTL	Connectable	CRI	Non	Lifetime
50/60Hz	0.5	20	Surface	lighting	⩾80	-Dim	20000h

Order Code	Product Description	Nominal Power	Color Temperature	Luminous Flux	Light Efficiency (lm/W)	Product Size (L×W×H mm)	Pcs/Carton	Carton Size (L*W*H mm)
N05E0-1001	LED 4W 3000K T5 batten (2 pin)	4W	3000K	400lm	100lm/W	311×22×34	30	405×190×165
N05E0-1002	LED 4W 4000K T5 batten (2 pin)	4W	4000K	400lm	100lm/W	311×22×34	30	405×190×165
N05E0-1003	LED 4W 6000K T5 batten (2 pin)	4W	6000K	400lm	100lm/W	311×22×34	30	405×190×165
N05E0-1004	LED 7W 3000K T5 batten (2 pin)	7W	3000K	700lm	100lm/W	571×22×34	30	665×190×165
N05E0-1005	LED 7W 4000K T5 batten (2 pin)	7W	4000K	700lm	100lm/W	571×22×34	30	665×190×165
N05E0-1006	LED 7W 6000K T5 batten (2 pin)	7W	6000K	700lm	100lm/W	571×22×34	30	665×190×165
N05E0-1007	LED 10W 3000K T5 batten (2 pin)	10W	3000K	1000lm	100lm/W	871×22×34	30	965×190×165
N05E0-1008	LED 10W 4000K T5 batten (2 pin)	10W	4000K	1000lm	100lm/W	871×22×34	30	965×190×165
N05E0-1009	LED 10W 6000K T5 batten (2 pin)	10W	6000K	1000lm	100lm/W	871×22×34	30	965×190×165
N05E0-1010	LED 14W 3000K T5 batten (2 pin)	14W	3000K	1400lm	100lm/W	1171×22×34	30	1265×190×165
N05E0-1011	LED 14W 4000K T5 batten (2 pin)	14W	4000K	1400lm	100lm/W	1171×22×34	30	1265×190×165
N05E0-1012	LED 14W 6000K T5 batten (2 pin)	14W	6000K	1400lm	100lm/W	1171×22×34	30	1265×190×165

CH22 Strip

Features :

- Higher brightness/double line LED design with 120 LEDS per meter
- Long life/high Temperature resistance
- Decorative lighting with different colors/good flexibility
- High quality/excellent consistency of color Temperature,copper wire>97%,high quality PVC strip cover
- RGB option

Dimensional Drawing:

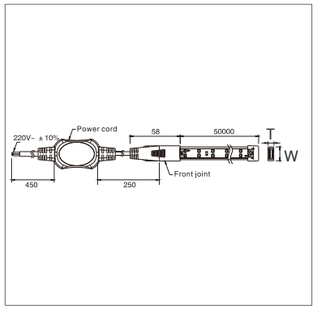

Application :

Home Retail Decorative

Certification :

CE CB TIS.1955-2551 SASO ROHS EMC

*TIS MAX 400W

Specification

AC220-240V	PF	SDCM	IP65*	CRI	INSTL	Lifetime
50/60Hz	0.9	⩽5	with proper installation	⩾80	Surface	15000h

Order Code	Product Description	Nominal Power	Color Temperature	Luminous Flux	Light Efficiency (lm/W)	Product Size (W×T mm)	Quantity Per Box	Carton Size (L*W*H mm)
N68E0-0064	Valor LED CH22 B HV-Strip 9W/M-50M 2835-120 3000K	9W/meter	3000K	750lm/m	85lm/W	W16.5×T7	1 roll/ 50m	330x330x170
N68E0-0065	Valor LED CH22 B HV-Strip 9W/M-50M 2835-120 4000K	9W/meter	4000K	750lm/m	85lm/W	W16.5×T7	1 roll/ 50m	330x330x170
N68E0-0066	Valor LED CH22 B HV-Strip 9W/M-50M 2835-120 6500K	9W/meter	6500K	750lm/m	85lm/W	W16.5×T7	1 roll/ 50m	330x330x170
N68E0-0067	Valor LED CH22 B HV-Strip 7W/M-50M 2835-120 Blue	7W/meter	Blue	-	-	W16.5×T7	1 roll/ 50m	330x330x170
N68E0-0068	Valor LED CH22 B HV-Strip 7W/M-50M 2835-120 Green	7W/meter	Green	-	-	W16.5×T7	1 roll/ 50m	330x330x170
N68E0-0069	Valor LED CH22 B HV-Strip 7W/M-50M 2835-120 Red	7W/meter	Red	-	-	W16.5×T7	1 roll/ 50m	330x330x170
N68E0-0013	Valor LED CH22 HV-Strip 8W/M-50M 5050-48 RGB	8W/meter	RGB	-	-	W15.5×T7.5	1 roll/ 50m	330x330x170

Each box include:
1 pcs driver (without plug) connected with strip
1 pcs power pins
1 pcs insulation tail cap
8 pcs fixing clip

Accessories:

Order Code	N68E0-0070
Product Description	Valor LED CH22 B HV-Strip accessory package(without plug)
Pcs/Carton	100
Carton Size	340*340*200
Available accesories	Include: 1 pcs driver (without plug) 1 pcs power pins 1 pcs insulation tail cap 8 pcs fixing clip

Order Code	N68E0-0071
Product Description	Valor LED CH22 B HV-Strip accessory package(with EU plug)
Pcs/Carton	100
Carton Size	340*340*200
Available accesories	Include: 1 pcs driver (with EU plug) 1 pcs power pins 1 pcs insulation tail cap 8 pcs fixing clip

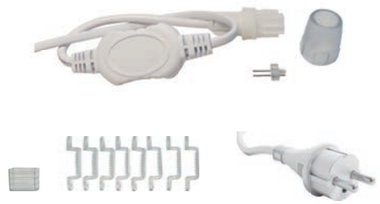

Order Code	N66E0-0003
Product Description	Valor LED CH22 HV-Strip RGB accessory package(without plug)
Pcs/Carton	50
Carton Size	160x66x64
Available accesories	Include: 1 pcs driver (without plug) 1 remote control 1 pcs power pins 1 pcs insulation tail cap 8 pcs fixing clip

Order Code	N66E0-0004
Product Description	CH22 RGB remote control
Pcs/Carton	50
Carton Size	34.5×34×35
Available accesories	-

SS22 Strip

Features :

- Easy and flexible installation
- High lumen efficiency up to 100lm/w
- Minimum cut 5cm
- Basic range for indoor cove lighting and decorative purposes

Application :

Home Hotels Retail

Certification :

CE

Dimensional Drawing:

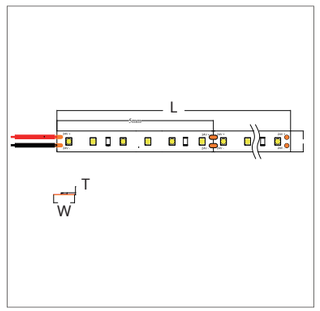

Specification :

5m /Roll	IP20 IP44	INSTL Surface	CRI ⩾80	Lifetime 25000h

Order Code	Product Description	Nominal Power	Color Temperature	Luminous Flux	Light Efficiency	min cut length	Product Size (L×W×T mm)	Pcs/Carton	Carton Size (L*W*H mm)
N68E0-0034	Valor LED Strip SS22 24V 60L 8mm 8W 2700K IP20 5M	8W/meter	2700K	750lm/m	95lm/W	10cm/cut	5000×8×1.2	40 Roll	330×290×170
N68E0-0035	Valor LED Strip SS22 24V 60L 8mm 8W 3000K IP20 5M	8W/meter	3000K	750lm/m	95lm/W	10cm/cut	5000×8×1.2	40 Roll	330×290×170
N68E0-0036	Valor LED Strip SS22 24V 60L 8mm 8W 4000K IP20 5M	8W/meter	4000K	800lm/m	100lm/W	10cm/cut	5000×8×1.2	40 Roll	330×290×170
N68E0-0037	Valor LED Strip SS22 24V 60L 8mm 8W 6500K IP20 5M	8W/meter	6500K	800lm/m	100lm/W	10cm/cut	5000×8×1.2	40 Roll	330×290×170
N68E0-0038	Valor LED Strip SS22 24V 60L 8mm 8W 2700K IP44 5M	8W/meter	2700K	680lm/m	85lm/W	10cm/cut	5000×10.5×4	40 Roll	330×290×170
N68E0-0039	Valor LED Strip SS22 24V 60L 8mm 8W 3000K IP44 5M	8W/meter	3000K	680lm/m	85lm/W	10cm/cut	5000×10.5×4	40 Roll	330×290×170
N68E0-0040	Valor LED Strip SS22 24V 60L 8mm 8W 4000K IP44 5M	8W/meter	4000K	720lm/m	90lm/W	10cm/cut	5000×10.5×4	40 Roll	330×290×170
N68E0-0041	Valor LED Strip SS22 24V 60L 8mm 8W 6500K IP44 5M	8W/meter	6500K	720lm/m	90lm/W	10cm/cut	5000×10.5×4	40 Roll	330×290×170
N68E0-0042	Valor LED Strip SS22 24V 120L 8mm 12W 2700K IP20 5M	12W/meter	2700K	1150lm/m	95lm/W	5cm/cut	5000×8×1.2	40 Roll	330×290×170
N68E0-0043	Valor LED Strip SS22 24V 120L 8mm 12W 3000K IP20 5M	12W/meter	3000K	1150lm/m	95lm/W	5cm/cut	5000×8×1.2	40 Roll	330×290×170
N68E0-0044	Valor LED Strip SS22 24V 120L 8mm 12W 4000K IP20 5M	12W/meter	4000K	1200lm/m	100lm/W	5cm/cut	5000×8×1.2	40 Roll	330×290×170
N68E0-0045	Valor LED Strip SS22 24V 120L 8mm 12W 6500K IP20 5M	12W/meter	6500K	1200lm/m	100lm/W	5cm/cut	5000×8×1.2	40 Roll	330×290×170
N68E0-0046	Valor LED Strip SS22 24V 120L 8mm 12W 2700K IP44 5M	12W/meter	2700K	1020lm/m	85lm/W	5cm/cut	5000×10.5×4	40 Roll	460×320×240
N68E0-0047	Valor LED Strip SS22 24V 120L 8mm 12W 3000K IP44 5M	12W/meter	3000K	1020lm/m	85lm/W	5cm/cut	5000×10.5×4	40 Roll	460×320×240
N68E0-0048	Valor LED Strip SS22 24V 120L 8mm 12W 4000K IP44 5M	12W/meter	4000K	1080lm/m	90lm/W	5cm/cut	5000×10.5×4	40 Roll	460×320×240
N68E0-0049	Valor LED Strip SS22 24V 120L 8mm 12W 6500K IP44 5M	12W/meter	6500K	1080lm/m	90lm/W	5cm/cut	5000×10.5×4	40 Roll	460×320×240
N68E0-0050	Valor LED Strip SS22 24V 60L+60L 10mm 12W TW IP20 5M	12W/meter	3000+6500K	1200lm/m	100lm/W	10cm/cut	5000×8×1.2	40 Roll	460×320×240
N68E0-0051	Valor LED Strip SS22 24V 60L+60L 10mm 12W TW IP44 5M	12W/meter	3000+6500K	1080lm/m	90lm/W	10cm/cut	5000×10.5×4	40 Roll	460×320×240

Accessories :

Order Code	Product Description	Product Size (L×W×T mm)	Pcs/Carton	Carton Size (L*W*H mm)
N6524-0340	30W24V constant voltage power supply	160×42×30	24	355×205×230
N6524-0341	60W24V constant voltage power supply	187×45×30.5	24	410×215×230
N6524-0342	120W24V constant voltage power supply	268×45×30.5	24	295×265×230
N6524-0343	150W24V constant voltage power supply	268×45×30.5	24	295×265×230
N6524-0344	200W24V constant voltage power supply IP67	216×65×39.5	24	260×255×180
N6524-0345	300W24V constant voltage power supply IP67	265×68×39.5	24	310×285×200

SS22 COB Strip

Features :

- Uniform light strip with COB technology
- Easy and flexible installation
- High lumen efficiency up to 100lm/w
- High color rendering >90
- Minimum cut 3.125cm
- Basic range for indoor cove lighting and decorative purposes

Application :

Home Hotels Retail

Certification :

CE TIS.1995-2551 EMC

*TIS MAX 400W / EMC HV

Dimensional Drawing:

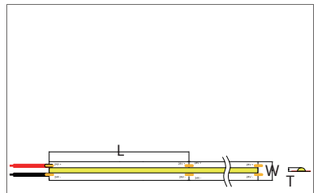

INSTL	CRI	Lifetime
Surface	⩾*90*	*25000h*

Specification :

Order Code	Product Description	Nominal Power	Color Temperature	Luminous Flux	Light Efficiency	min cut length	Product Size (L×W×T mm)	Length per Roll	Pcs/Carton	Carton Size (L*W*H mm)
N68E0-0022	Valor COB Strip SS22 24V 256L 8mm 10W 2700K IP20 5M Ra90	10W/m	2700K	950lm/m	95lm/W	6.5cm/cut	5000×8×2	5m	40 Roll	330×290×170
N68E0-0023	Valor COB Strip SS22 24V 256L 8mm 10W 3000K IP20 5M Ra90	10W/m	3000K	950lm/m	95lm/W	6.5cm/cut	5000×8×2	5m	40 Roll	330×290×170
N68E0-0024	Valor COB Strip SS22 24V 256L 8mm 10W 4000K IP20 5M Ra90	10W/m	4000K	1000lm/m	100lm/W	6.5cm/cut	5000×8×2	5m	40 Roll	330×290×170
N68E0-0025	Valor COB Strip SS22 24V 256L 8mm 10W 6500K IP20 5M Ra90	10W/m	6500K	1000lm/m	100lm/W	6.5cm/cut	5000×8×2	5m	40 Roll	330×290×170
N68E0-0030	Valor COB Strip SS22 24V 512L 8mm 12W 2700K IP20 5M Ra90	12W/m	2700K	1150lm/m	95lm/W	3.125cm/cut	5000×8×2	5m	40 Roll	330×290×170
N68E0-0031	Valor COB Strip SS22 24V 512L 8mm 12W 3000K IP20 5M Ra90	12W/m	3000K	1150lm/m	95lm/W	3.125cm/cut	5000×8×2	5m	40 Roll	330×290×170
N68E0-0032	Valor COB Strip SS22 24V 512L 8mm 12W 4000K IP20 5M Ra90	12W/m	4000K	1200lm/m	100lm/W	3.125cm/cut	5000×8×2	5m	40 Roll	330×290×170
N68E0-0033	Valor COB Strip SS22 24V 512L 8mm 12W 6500K IP20 5M Ra90	12W/m	6500K	1200lm/m	100lm/W	3.125cm/cut	5000×8×2	5m	40 Roll	330×290×170
N68E0-0052	Valor COB Strip SS22 HV 288L 8mm 10W 2700K IP20 5M Ra90	10W/m	2700K	570lm/m	60lm/W	50cm/cut	5000×11.5×5.5	50m	1 Roll	340×340×140
N68E0-0053	Valor COB Strip SS22 HV 288L 8mm 10W 3000K IP20 5M Ra90	10W/m	3000K	570lm/m	60lm/W	50cm/cut	5000×11.5×5.5	50m	1 Roll	340×340×140
N68E0-0054	Valor COB Strip SS22 HV 288L 8mm 10W 4000K IP20 5M Ra90	10W/m	4000K	600lm/m	60lm/W	50cm/cut	5000×11.5×5.5	50m	1 Roll	340×340×140
N68E0-0055	Valor COB Strip SS22 HV 288L 8mm 10W 6500K IP20 5M Ra90	10W/m	6500K	600lm/m	60lm/W	50cm/cut	5000×11.5×5.5	50m	1 Roll	340×340×140

Accessories* :

Order Code	Product Description	Product Size (L×W×T mm)	Pcs/Carton	Carton Size (L*W*H mm)
N6524-0340	30W24V constant voltage power supply	160×42×30	24	355×205×230
N6524-0341	60W24V constant voltage power supply	187×45×30.5	24	410×215×230
N6524-0342	120W24V constant voltage power supply	268×45×30.5	24	295×265×230
N6524-0343	150W24V constant voltage power supply	268×45×30.5	24	295×265×230
N6524-0344	200W24V constant voltage power supply IP67	216×65×39.5	24	260×255×180
N6524-0345	300W24V constant voltage power supply IP67	265×68×39.5	24	310×285×200

*For 24V strip

SS20 Strip

Features :

- Safety and easy installation/24V low voltage
- Indirect lighting creates comfortable space/good flexibility
- Long lifespan 25,000h with high quality driver
- Wide range of different wattages and IP20/IP65 option

Application :

Home Hotels Retail

Certification :

CE

Dimensional Drawing:

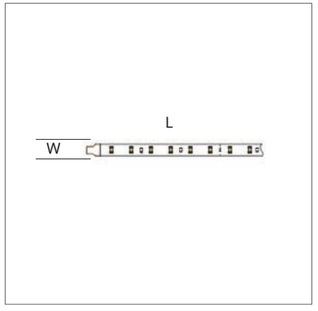

Specification

24V	Cut size	PF	INSTL	IP20	5m	CRI	Lifetime
DC	*10cm*	*0.5*	*Surface*	*IP65*	*/Roll*	*⩾80*	*25000h*

Order Code	Product Description	Nominal Power	Color Temperture	Luminous Flux	Light Efficiency	Product Size (L×W×T mm)	Pcs/Carton	Carton Size (L*W*H mm)
N6824-0038	Duro LED-Strip-SS20 24V 4W2700K IP20	4W/m	2700K	320lm/m	80lm/W	5000×8×2.2	88 Roll	540X450X265
N6824-0039	Duro LED-Strip-SS20 24V 4W3000K IP20	4W/m	3000K	340lm/m	85lm/W	5000×8×2.2	88 Roll	540X450X265
N6824-0040	Duro LED-Strip-SS20 24V 4W4000K IP20	4W/m	4000K	360lm/m	90lm/W	5000×8×2.2	88 Roll	540X450X265
N6824-0041	Duro LED-Strip-SS20 24V 10W2700K IP20	10W/m	2700K	850lm/m	85lm/W	5000×10×1.5	88 Roll	540X450X265
N6824-0042	Duro LED-Strip-SS20 24V 10W3000K IP20	10W/m	3000K	900lm/m	90lm/W	5000×10×1.5	88 Roll	540X450X265
N6824-0043	Duro LED-Strip-SS20 24V 10W4000K IP20	10W/m	4000K	950lm/m	95lm/W	5000×10×1.5	88 Roll	540X450X265
N6824-0044	Duro LED-Strip-SS20 24V 12W2700K IP20	12W/m	2700K	1080lm/m	90lm/W	5000×10×1.5	88 Roll	540X450X265
N6824-0045	Duro LED-Strip-SS20 24V 12W3000K IP20	12W/m	3000K	1140lm/m	95lm/W	5000×10×1.5	88 Roll	540X450X265
N6824-0046	Duro LED-Strip-SS20 24V 12W4000K IP20	12W/m	4000K	1200lm/m	100lm/W	5000×10×1.5	88 Roll	540X450X265
N6824-0047	Duro LED-Strip-SS20 24V 4W2700K IP65	4W/m	2700K	320lm/m	80lm/W	5000×10×4	64 Roll	540X450X265

Order Code	Product Description	Nominal Power	Color Temperture	Luminous Flux	Light Efficiency	Product Size (L×W×T mm)	Pcs/Carton	Carton Size (L*W*H mm)
N6824-0048	Duro LED-Strip-SS20 24V 4W3000K IP65	4W/m	3000K	340lm/m	85lm/W	5000×10×4	64 Roll	540X450X265
N6824-0049	Duro LED-Strip-SS20 24V 4W4000K IP65	4W/m	4000K	360lm/m	90lm/W	5000×10×4	56 Roll	540X450X265
N6824-0050	Duro LED-Strip-SS20 24V 10W2700K IP65	10W/m	2700K	850lm/m	85lm/W	5000×12×4	56 Roll	540X450X265
N6824-0051	Duro LED-Strip-SS20 24V 10W3000K IP65	10W/m	3000K	900lm/m	90lm/W	5000×12×4	56 Roll	540X450X265
N6824-0052	Duro LED-Strip-SS20 24V 10W4000K IP65	10W/m	4000K	950lm/m	95lm/W	5000×12×4	56 Roll	540X450X265
N6824-0053	Duro LED-Strip-SS20 24V 12W2700K IP65	12W/m	2700K	1080lm/m	90lm/W	5000×12×4	56 Roll	540X450X265
N6824-0054	Duro LED-Strip-SS20 24V 12W3000K IP65	12W/m	3000K	1140lm/m	95lm/W	5000×12×4	56 Roll	540X450X265
N6824-0055	Duro LED-Strip-SS20 24V 12W4000K IP65	12W/m	4000K	1200lm/m	100lm/W	5000×12×4	56 Roll	540X450X265

Accessories :

Order Code	Product Description
N68C4-0039	8mm end connector- single wiring（IP20 4W)
N68C4-0040	10mm end connector- single wiring(IP20 10/12W)
N68C4-0044	8mm middle connector（IP20 4W)
N68C4-0045	10mm middle connector (IP20 10W/12W)
N68C4-0049	10mm cliper accessory kit（IP65 4W)

Order Code	Product Description
N68C4-0050	12mm cliper accessory kit（IP65 10W/12W)
N68C4-0052	10mm silica end cap（IP65 4W)
N68C4-0053	12mm silica end cap (IP65 10W/12W)
N68C4-0055	silicon glue

N68C4-0039 / N68C4-0040

Single wiring end connector

N68C4-0044 / N68C4-0045

Middle connector

N68C4-0049 / N68C4-0050

Screw and cliper kit (For IP65 strip)
Cliper kit includes (Cliper 10pcs M2.5x8 with screw 20pcs/5m)

N68C4-0052 / N68C4-0053

End Cap (For IP65 strip)

N68C4-0055

Glue (For IP65 strip)

Accessories :

Order Code	Product Description	Product Size (L×W×T mm)	Pcs /Carton	Carton Size (L×W×H mm)
N6524-0340	30W24V constant voltage power supply	160×42×30	24	355×205×230
N6524-0341	60W24V constant voltage power supply	187×45×30.5	24	410×215×230
N6524-0342	120W24V constant voltage power supply	268×45×30.5	24	295×265×230
N6524-0343	150W24V constant voltage power supply	268×45×30.5	24	295×265×230
N6524-0344	200W24V constant voltage power supply IP67	216×65×39.5	24	260×255×180
N6524-0345	300W24V constant voltage power supply IP67	265×68×39.5	24	310×285×200

PL22

Features :

- High lumen efficiency/up to 120lm/w with back-lit technology
- Long lifespan 30,000h/save maintenance cost
- Multiple sizes and installation possibilities
- Uniform and comfortable lighting environment

Dimensional Drawing:

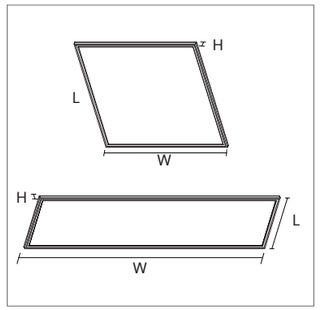

Application :

School Office Hospital

Certification :

CE CB TIS.1955-2551 SNI SIRIM EMC

Specification :

AC220-240V 50/60Hz	PF 0.9	IP 20	INSTL Recessed /Pendant	CRI ⩾80	Lifetime 30000h

Order Code	Product Description	Nominal Power	Color Temperature	Luminous Flux	Light Efficiency (lm/W)	Product Size (L×W×H mm)	Pcs/Carton	Carton Size (L*W*H mm)
N67E0-0101	PL22 LED Panel light 36W 4000K 600×600	36W	4000K	4320lm	120lm/W	595×595×32	4	670×190×650
N67E0-0102	PL22 LED Panel light 36W 6500K 600×600	36W	6500K	4320lm	120lm/W	595×595×32	4	670×190×650
N67E0-0103	PL22 LED Panel light 36W 4000K 300×1200	36W	4000K	4320lm	120lm/W	295×1195×32	4	1290x170x350
N67E0-0104	PL22 LED Panel light 36W 6500K 300×1200	36W	6500K	4320lm	120lm/W	295×1195×32	4	1290x170x350
N67E0-0105	PL22 LED Panel light 60W 4000K 600×1200	60W	4000K	7200lm	120lm/W	595×1195×32	2	1290x95x650
N67E0-0106	PL22 LED Panel light 60W 6500K 600×1200	60W	6500K	7200lm	120lm/W	595×1195×32	2	1290x95x650

Accessories :

Order Code	Product Description	Pcs /Carton	Carton Size (L×W×H mm)
N66E0-0005	Pendant installation accessory kit	50	360X280X140
N66E0-0006	Recessed with clip installation accessory kit	20	280X200x170

Valor Slim Tunable Ceiling Light

Features :

- Surface mounted with slim profile design
- Tunable white from 3000k-6500k
- Multiple options of sizes for different rooms
- Easy installation

Dimensional Drawing:

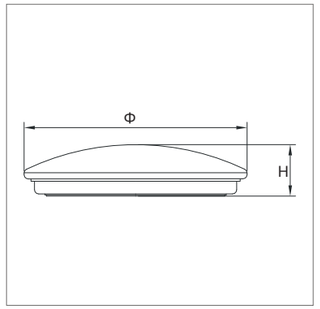

Application :

Home Retail

Certification :

CE CB EMC

Specification

AC100-240V 50/60Hz	PF 0.5	IP 20	CRI ⩾80	INSTL Surface	Lifetime 20000h

Order Code	Product Description	Nominal Power	Color Temperature	Luminous Flux	Light Efficiency (lm/W)	Product Size (Φ×H mm)	Pcs /Carton	Carton Size (L*W*H mm)
N01E0-0002	Valor LED Ceiling Lamp 16W Tunable White	16W	6500K-3000K-4000K	1600lm	100lm/W	241×23.5	20	510x315x270
N01E0-0003	Valor LED Ceiling Lamp 24W Tunable White	24W	6500K-3000K-4000K	2400lm	100lm/W	291×23.5	20	610X315X320
N01E0-0004	Valor LED Ceiling Lamp 32W Tunable White	32W	6500K-3000K-4000K	3200lm	100lm/W	421×23.5	20	615x440x450
N01E0-0005	Valor LED Ceiling Lamp 48W Tunable White	48W	6500K-3000K-4000K	4800lm	100lm/W	541×28.5	10	560X355X570

Valor Ceiling Light

Features :

- Long lifespan/30,000h
- Energy saving/up to 50% compared to conventional CFL ceiling lamp
- Multiple options of color Temperature
- Easy installation

Application :

Home

Certification :

TIS.1955-2551

Dimensional Drawing:

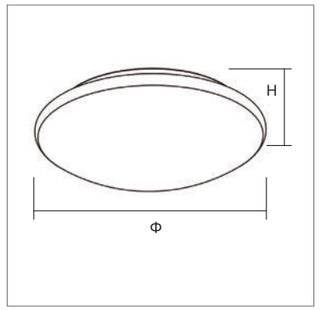

Specification :

AC220-240V 50/60Hz	PF 0.5	IP 20	INSTL Surface	PMMA	Beam angle 130°	CRI ⩾80	Lifetime 30000h

Order Code	Product Description	Nominal Power	Color Temperature	Luminous Flux	Light Efficiency (lm/W)	Product Size (Φ×H mm)	Pcs/Carton	Carton Size (L*W*H mm)
N0124-0349	Valor LED-GEN3 Thin Ceiling Light 12W4000K	12W	4000K	840lm	70lm/W	Φ260×55	8	530×530×155
N0124-0350	Valor LED-GEN3 Thin Ceiling Light 18W4000K	18W	4000K	1340lm	75lm/W	Φ330×65	8	635×400×410
N0124-0351	Valor LED-GEN3 Thin Ceiling Light 24W4000K	24W	4000K	1670lm	70lm/W	Φ390×65	8	635×450×460
N0124-0352	Valor LED-GEN3 Thin Ceiling Light 12W6500K	12W	6500K	890lm	75lm/W	Φ260×55	8	530×530×155
N0124-0353	Valor LED-GEN3 Thin Ceiling Light 18W6500K	18W	6500K	1390lm	80lm/W	Φ330×65	8	635×400×410
N0124-0354	Valor LED-GEN3 Thin Ceiling Light 24W6500K	24W	6500K	1780lm	75lm/W	Φ390×65	8	635×450×460
N6600-0617	Valor LED-GEN3 Thin CL LED Module 12W4000K	12W	4000K	1050lm	90lm/W	Φ155×23	30	485×330×180
N6600-0618	Valor LED-GEN3 Thin CL LED Module 18W4000K	18W	4000K	1675lm	95lm/W	Φ195×23	30	485×406×218
N6600-0619	Valor LED-GEN3 Thin CL LED Module 24W4000K	24W	4000K	2090lm	90lm/W	Φ230×23	30	485×480×455
N6600-0620	Valor LED-GEN3 Thin CL LED Module 12W6500K	12W	6500K	1110lm	90lm/W	Φ155×23	30	485×330×180
N6600-0621	Valor LED-GEN3 Thin CL LED Module 18W6500K	18W	6500K	1740lm	100lm/W	Φ195×23	30	485×406×218
N6600-0622	Valor LED-GEN3 Thin CL LED Module 24W6500K	24W	6500K	2225lm	90lm/W	Φ230×23	30	485×480×455

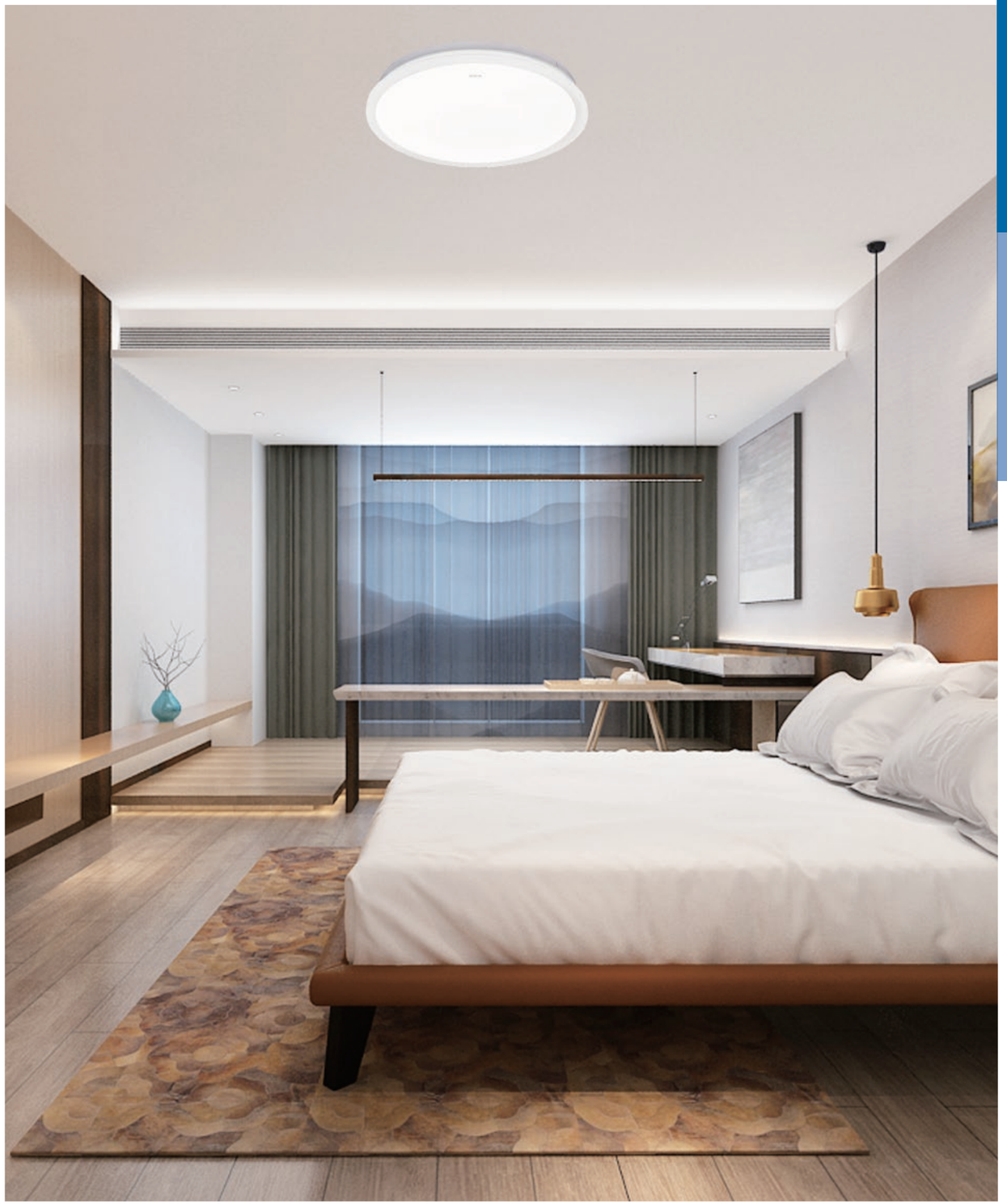

FL30 Floodlight

Features :

- Modern design/big screen and slim compact design
- Optimized waterproof design for outdoor application/IP65 and with 3-1 patented waterproof terminal
- Stable performance in poor grid environment/Max 3KV surge protection
- High efficiency and energy saving/up to 90lm/W
- Low maintenance cost and long life/30,000h lifetime
- Excellent thermal management for stable performance/die-casting aluminum housing

Application :

Landscape Yard Billboard House

Certification :

CE CB TIS.1955-2551 SNI ROHS SIRIM EMC

Dimensional Drawing:

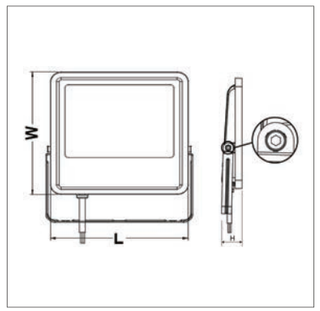

Specification :

AC220-240V **50/60Hz**	PF **>0.9**	IP **65**	CRI **⩾80**	Die casting aluminum	Lifetime **30000h**

INSTL **Mounting with screws**	IK06:10W/30W/50W **IK07:100W/150W/200W**	Cable: 30cm, 3*1mm² **rubber cable /double-insulated**	Optics: **PC reflector +Matt tempered glass**

Order Code	Product Description	Nominal Power	Color Temperature	Luminous Flux	Beam Angle	Waterproof terminal	Surge Protection (L/N-PE)	Product Size (L×W×T mm)	Pcs /Carton	Carton Size (L*W*H mm)
L05E0-0074	FL30 LED floodlight 10W3000K	10W	3000K	855lm	90°	2 in 1 Patented	2kv	103×146×28	36	374×235×330
L05E0-0075	FL30 LED floodlight 10W4000K	10W	4000K	900lm	90°	2 in 1 Patented	2kv	103×146×28	36	374×235×330
L05E0-0076	FL30 LED floodlight 10W6500K	10W	6500K	900lm	90°	2 in 1 Patented	2kv	103×146×28	36	374×235×330
L05E0-0077	FL30 LED floodlight 30W3000K	30W	3000K	2565lm	100°	2 in 1 Patented	3kv	176×138×31	12	329×245×216
L05E0-0078	FL30 LED floodlight 30W4000K	30W	4000K	2700lm	100°	2 in 1 Patented	3kv	176×138×31	12	329×245×216
L05E0-0079	FL30 LED floodlight 30W6500K	30W	6500K	2700lm	100°	2 in 1 Patented	3kv	176×138×31	12	329×245×216
L05E0-0080	FL30 LED floodlight 50W3000K	50W	3000K	4275lm	100°	2 in 1 Patented	3kv	217×170×32	12	399×251×251
L05E0-0081	FL30 LED floodlight 50W4000K	50W	4000K	4500lm	100°	2 in 1 Patented	3kv	217×170×32	12	399×251×251
L05E0-0082	FL30 LED floodlight 50W6500K	50W	6500K	4500lm	100°	2 in 1 Patented	3kv	217×170×32	12	399×251×251
L05E0-0083	FL30 LED floodlight 100W3000K	100W	3000K	8550lm	100°	3 in 1 Patented	3kv	324×244×39	6	301×280×333
L05E0-0084	FL30 LED floodlight 100W4000K	100W	4000K	9000lm	100°	3 in 1 Patented	3kv	324×244×39	6	301×280×333
L05E0-0085	FL30 LED floodlight 100W6500K	100W	6500K	9000lm	100°	3 in 1 Patented	3kv	324×244×39	6	301×280×333
L05E0-0086	FL30 LED floodlight 150W3000K	150W	3000K	12825lm	100°	3 in 1 Patented	3kv	289×387×48	4	329×239×374
L05E0-0087	FL30 LED floodlight 150W4000K	150W	4000K	13500lm	100°	3 in 1 Patented	3kv	289×387×48	4	329×239×374
L05E0-0088	FL30 LED floodlight 150W6500K	150W	6500K	13500lm	100°	3 in 1 Patented	3kv	289×387×48	4	329×239×374
L05E0-0089	FL30 LED floodlight 200W3000K	200W	3000K	17100lm	100°	3 in 1 Patented	3kv	342×467×55	4	384×265×429
L05E0-0090	FL30 LED floodlight 200W4000K	200W	4000K	18000lm	100°	3 in 1 Patented	3kv	342×467×55	4	384×265×429
L05E0-0091	FL30 LED floodlight 200W6500K	200W	6500K	18000lm	100°	3 in 1 Patented	3kv	342×467×55	4	384×265×429

Patented 2 in 1 waterproof terminal: Waterproof, Anti-Siphon
Patented 3 in 1 waterproof terminal: Waterproof, Anti-Siphon, Breather Valve

FL50 Floodlight

Features :

- Durable material & Good dissipation/die-casting aluminum housing & longer cable
- Stable performance in poor grid environment/Max 3KV surge protection
- Low maintenance cost and long life/40,000h lifetime
- Reliable outdoor application/IP65 & full range with Rebreather hole
- High efficiency and energy saving/LED chip efficiency up to 140lm/w
- Easy installation for multipurpose/adjustable iron bracket"

Application :

Landscape Yard Billboard House

Certification :

CE CB TIS.1955-2551 ROHS EMC

Dimensional Drawing:

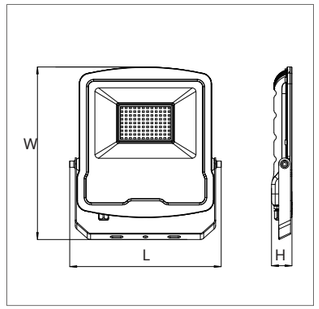

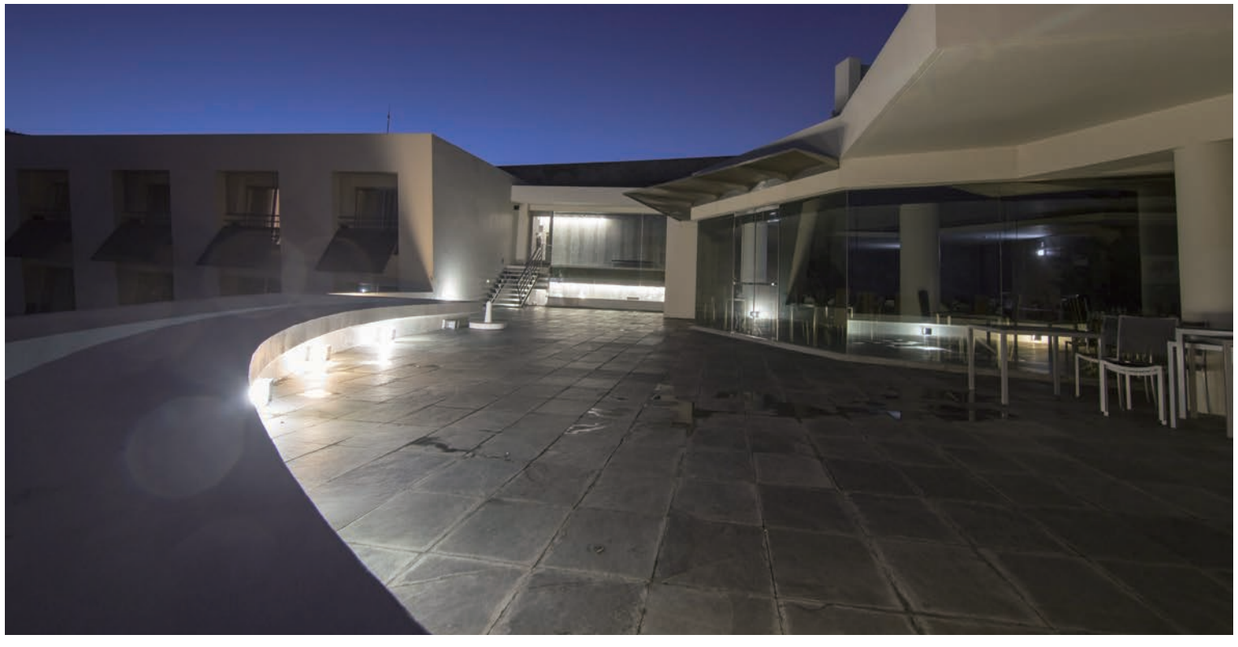

Specification :

AC220-240V	PF	CRI	Beam angle	IK	IP	Die casting aluminum	Lifetime	INSTL	Optics:
50/60Hz	***>0.9***	***⩾80***	***110°***	***06***	***65***		***40000h***	***Mounting with screws***	***Alu reflector +high transmitance woven tempered glass***

Order Code	Product Description	Nominal Power	Color Temperature	Luminous Flux	Light Efficiency	Surge Protection (L/N-PE)	Cable Length (3*1mm² rubber cable /double-insulated)	Product Size (L×W×H mm)	Pcs /Carton	Carton Size (L*W*H mm)
L05E0-0028	FL50 LED floodlight 10W3000K	10W	3000K	950lm	95lm/W	2kv	30cm	125x104×27	36	315×235×265
L05E0-0029	FL50 LED floodlight 10W4000K	10W	4000K	1000lm	100lm/W	2kv	30cm	125x104×27	36	315×235×265
L05E0-0030	FL50 LED floodlight 10W6500K	10W	6500K	1000lm	100lm/W	2kv	30cm	125x104×27	36	315×235×265
L05E0-0031	FL50 LED floodlight 30W3000K	30W	3000K	2850lm	95lm/W	2kv	30cm	209×168×27	20	360×180×460
L05E0-0032	FL50 LED floodlight 30W4000K	30W	4000K	3000lm	100lm/W	2kv	30cm	209×168×27	20	360×180×460
L05E0-0033	FL50 LED floodlight 30W6500K	30W	6500K	3000lm	100lm/W	2kv	30cm	209×168×27	20	360×180×460
L05E0-0034	FL50 LED floodlight 50W3000K	50W	3000K	4750lm	95lm/W	3kv	50cm	237×200×36	12	428×270×265
L05E0-0035	FL50 LED floodlight 50W4000K	50W	4000K	5000lm	100lm/W	3kv	50cm	237×200×36	12	428×270×265
L05E0-0036	FL50 LED floodlight 50W6500K	50W	6500K	5000lm	100lm/W	3kv	50cm	237×200×36	12	428×270×265
L05E0-0037	FL50 LED floodlight 100W3000K	100W	3000K	9500lm	95lm/W	3kv	50cm	320.9×281.6×38	4	301×190×348
L05E0-0038	FL50 LED floodlight 100W4000K	100W	4000K	10000lm	100lm/W	3kv	50cm	320.9×281.6×38	4	301×190×348
L05E0-0039	FL50 LED floodlight 100W6500K	100W	6500K	10000lm	100lm/W	3kv	50cm	320.9×281.6×38	4	301×190×348
L05E0-0040	FL50 LED floodlight 150W3000K	150W	3000K	14250lm	95lm/W	3kv	50cm	420x333×51	4	349×245×444
L05E0-0041	FL50 LED floodlight 150W4000K	150W	4000K	15000lm	100lm/W	3kv	50cm	420x333×51	4	349×245×444
L05E0-0042	FL50 LED floodlight 150W6500K	150W	6500K	15000lm	100lm/W	3kv	50cm	420x333×51	4	349×245×444
L05E0-0043	FL50 LED floodlight 200W3000K	200W	3000K	19000lm	95lm/W	3kv	50cm	470x385×51	3	401×190×494
L05E0-0044	FL50 LED floodlight 200W4000K	200W	4000K	20000lm	100lm/W	3kv	50cm	470x385×51	3	401×190×494
L05E0-0045	FL50 LED floodlight 200W6500K	200W	6500K	20000lm	100lm/W	3kv	50cm	470x385×51	3	401×190×494

FL50 Floodlight

Tunable WH / RGB / SMART

Tunable WH RGB SMART

Features :

- WiFi/RGB version:16 million dimmable colors/colourful lighting for outdoor festival
- Easy control via APP(WiFi) /Remote(CCT/RGB), could Group control/Multiple scenes etc.
- Easy to set up and install (WiFi)/no hub required & adjustable iron bracket
- Reliable outdoor application/IP65 & full range with Rebreather hole
- Durable Material & Good Dissipation/die-casting aluminum housing
- Low maintenance cost and long life/30,000h lifetime

Application :

Landscape Yard Billboard House

Dimensional Drawing:

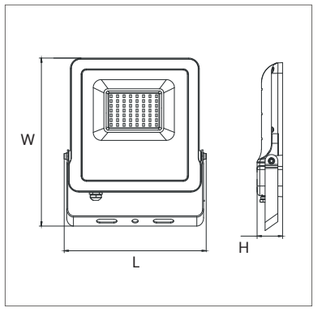

Certification :

CE CB TIS.1955-2551 EMC

Specification

AC220-240V 50/60Hz	PF >0.9	Lifetime 40000h	IK 06	IP 65	Die casting aluminum	Beam angle 110°	INSTL Mounting with screws	Optics: Alu reflector+ high transmitance woven tempered glass

Order Code	L05E0-0071	L05E0-0072	L05E0-0073
Product Description	FL50 LED floodlight 30W+30W Tunable WH	FL50 LED floodlight 50W RGB +remote controller	FL50 Smart LED floodlight 50W RGBW WiFi
Nominal Power	60W @4000K 30W @3000K/6500K	50W	50W
Color Temperture	3000K/4000K/6500K	RGB	RGBW
Luminous Flux(lm/m)	4320lm	1800lm	5000lm
Light Efficiency	75lm/w	-	80lm/w
Control	On-off/Dimming/Tunable WH	On-off/Dimming/RGB	Simon smart app
Cable	30cm, 3*1mm² rubber cable /double-insulated	30cm, 3*1mm² rubber cable/double-insulated	30cm, 3*1mm² rubber cable/double-insulated
Product Size (L×W×H mm)	200×237×36	200×237×36	284×244×39
Pcs/Carton	12	12	6
Carton Size (L×W×H mm)	428×270×265	428×270×265	300×270×308

SFL59 Floodlight Solar

Features :

- More bright powered by A1 class battery/One full charging can last up to 12 hours, even on rainy days.
- Shaped accent light beam/Upgraded lens design
- Long lifetime/10 years battery life
  *1 time charging/day
  10 hours lighting/day
- Wireless Remote control/Auto mode/Timer/Adjust brightness
- Reliable outdoor application/IP66 waterproof

Application :

Landscape Yard Billboard House

Certification :

CE CB TIS.1955-2551 EMC

Dimensional Drawing:

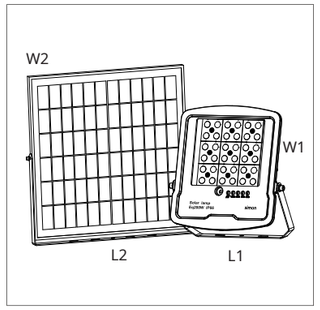

Specification :

IK	IP	Die casting aluminum	Beam angle	CRI	Finishes	Optics	LED chip efficency:	Power supply:
07	*66*		*60°*	*≥80*	*Black*	*PC LENS*	*160lm/w*	*Solar panel*

INSTL	Working time:	Lifetime:	On-off:
Mounting with screws	*4hrs high light output 12hrs programed step dim*	*30000hrs Battery charge 2000times*	*(remote control/master switch /automation) Dimming Timing*

Order Code	Product Description	Type Equivalent to halogen lamp wattage (W)	Color Temperature	Initial Light output	Battery capacity	Battery Max capacity	Solar Panel capacity	Product Size (L1×W1×H1 mm)	Solar panel size (L2*W2*H2 mm)	Pcs /Carton	Carton Size (L*W*H mm)
L05E0-0001	SFL59 LED floodlight Solar Eq40W 3000K	40W	3000K	800lm	3.2V 3000mAH	100%	6V/6Wp	203×235×44	368×190×20	4	505×395×285
L05E0-0002	SFL59 LED floodlight Solar Eq40W 4000K	40W	4000K	800lm	3.2V 3000mAH	100%	6V/6Wp	203×235×44	368×190×20	4	505×395×285
L05E0-0003	SFL59 LED floodlight Solar Eq40W 6500K	40W	6500K	800lm	3.2V 3000mAH	100%	6V/6Wp	203×235×44	368×190×20	4	505×395×285
L05E0-0004	SFL59 LED floodlight Solar Eq60W 3000K	60W	3000K	1200lm	3.2V 4000mAH	100%	6V/9Wp	203×235×44	368×190×20	4	505×395×285
L05E0-0005	SFL59 LED floodlight Solar Eq60W 4000K	60W	4000K	1200lm	3.2V 4000mAH	100%	6V/9Wp	203×235×44	368×190×20	4	505×395×285
L05E0-0006	SFL59 LED floodlight Solar Eq60W 6500K	60W	6500K	1200lm	3.2V 4000mAH	100%	6V/9Wp	203×235×44	368×190×20	4	505×395×285
L05E0-0007	SFL59 LED floodlight Solar Eq100W 3000K	100W	3000K	1800lm	3.2V 8000mAH	100%	6V/15Wp	203×235×44	373×316×20	4	505×400×360
L05E0-0008	SFL59 LED floodlight Solar Eq100W 4000K	100W	4000K	1800lm	3.2V 8000mAH	100%	6V/15Wp	203×235×44	373×316×20	4	505×400×360
L05E0-0009	SFL59 LED floodlight Solar Eq100W 6500K	100W	6500K	1800lm	3.2V 8000mAH	100%	6V/15Wp	203×235×44	373×316×20	4	505×400×360
L05E0-0010	SFL59 LED floodlight Solar Eq200W 3000K	200W	3000K	2800lm	3.2V 16000mAH	100%	6V/20Wp	282×321×41	374×376×20	3	400×365×420
L05E0-0011	SFL59 LED floodlight Solar Eq200W 4000K	200W	4000K	2800lm	3.2V 16000mAH	100%	6V/20Wp	282×321×41	374×376×20	3	400×365×420
L05E0-0012	SFL59 LED floodlight Solar Eq200W 6500K	200W	6500K	2800lm	3.2V 16000mAH	100%	6V/20Wp	282×321×41	374×376×20	3	400×365×420
L05E0-0013	SFL59 LED floodlight Solar Eq400W 3000K	400W	3000K	5500lm	6.4V 12000mAH	100%	12V/35Wp	333×420×51	723×361×27	2	775×286×470
L05E0-0014	SFL59 LED floodlight Solar Eq400W 4000K	400W	4000K	5500lm	6.4V 12000mAH	100%	12V/35Wp	333×420×51	723×361×27	2	775×286×470
L05E0-0015	SFL59 LED floodlight Solar Eq400W 6500K	400W	6500K	5500lm	6.4V 12000mAH	100%	12V/35Wp	333×420×51	723×361×27	2	775×286×470
L05E0-0016	SFL59 LED floodlight Solar Eq500W 3000K	500W	3000K	6500lm	6.4V 16500mAH	100%	12V/40Wp	385×470×51	703×451×27.5	1	753×148×530
L05E0-0017	SFL59 LED floodlight Solar Eq500W 4000K	500W	4000K	6500lm	6.4V 16500mAH	100%	12V/40Wp	385×470×51	703×451×27.5	1	753×148×530
L05E0-0018	SFL59 LED floodlight Solar Eq500W 6500K	500W	6500K	6500lm	6.4V 16500mAH	100%	12V/40Wp	385×470×51	703×451×27.5	1	753×148×530

Cable length: 5m, 2*0.5mm²

PVC cable/double-insulated/male female cable/ waterproof plug/Black/IEC

RD50 Streetlight

Features :

- Professional optical to ensure outstanding light distribution
- Reliable design with surge protection up to 6KV,anti-shock IK07,waterproof IP66
- Super-fine finishing with 16 processes ensures corrosion preventive
- Durable material and good dissipation, enabling 50,000h long lifespan
- Adjustable installation angle easy to fit different poles

Application :

Parking Square Rural road Factory

Certification :

CE CB SNI SIRIM EMC

Dimensional Drawing:

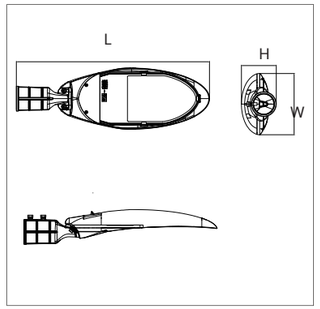

Specification :

IK	IP	Die casting aluminum	Beam angle	AC220-240V	PF	CRI	Cable	Lifetime	Customize option
07	66		150*70°±10°	50/60Hz	0.95	80	300 ±10mm	50000h	2835 LED chips

Customize option	Customize option
glass cover	10KV surge

Order Code	Product Description	Nominal Power	Color Temperature	Luminous Flux	Light Efficiency	Surge Protection (L/N-PE)	Product Size (L×W×H mm)	Pcs /Carton	Carton Size (L*W*H mm)
L01E0-0009	RD50 LED streetlight 30W 3000K	30W	3000K	3600lm	120lm/W	1/2KV	344×124×88	2	400×241×193
L01E0-0010	RD50 LED streetlight 30W 4000K	30W	4000K	3900 lm	130lm/W	1/2KV	344×124×88	2	400×241×193
L01E0-0011	RD50 LED streetlight 30W 6500K	30W	6500K	3900 lm	130lm/W	1/2KV	344×124×88	2	400×241×193
L01E0-0012	RD50 LED streetlight 50W 3000K	50W	3000K	6000lm	120lm/W	4/6KV	495×146×95	2	551×213×208
L01E0-0013	RD50 LED streetlight 50W 4000K	50W	4000K	6500 lm	130lm/W	4/6KV	495×146×95	2	551×213×208
L01E0-0014	RD50 LED streetlight 50W 6500K	50W	6500K	6500 lm	130lm/W	4/6KV	495×146×95	2	551×213×208
L01E0-0015	RD50 LED streetlight 75W 3000K	75W	3000K	9000 lm	120lm/W	4/6KV	538×166×97	2	595×235×233
L01E0-0016	RD50 LED streetlight 75W 4000K	75W	4000K	9750 lm	130lm/W	4/6KV	538×166×97	2	595×235×233
L01E0-0017	RD50 LED streetlight 75W 6500K	75W	6500K	9750 lm	130lm/W	4/6KV	538×166×97	2	595×235×233
L01E0-0018	RD50 LED streetlight 100W 3000K	100W	3000K	12000 lm	120lm/W	4/6KV	599×190×108	2	657×245×261
L01E0-0019	RD50 LED streetlight 100W 4000K	100W	4000K	13000 lm	130lm/W	4/6KV	599×190×108	2	657×245×261
L01E0-0020	RD50 LED streetlight 100W 6500K	100W	6500K	13000 lm	130lm/W	4/6KV	599×190×108	2	657×245×261
L01E0-0021	RD50 LED streetlight 150W 3000K	150W	3000K	18000lm	120lm/W	4/6KV	645×238×130	2	702×280×308
L01E0-0022	RD50 LED streetlight 150W 4000K	150W	4000K	19500 lm	130lm/W	4/6KV	645×238×130	2	702×280×308
L01E0-0023	RD50 LED streetlight 150W 6500K	150W	6500K	19500 lm	130lm/W	4/6KV	645×238×130	2	702×280×308

SIMON 65C

NEW CORE · NEW STANDARD

New 65C range

Fast break and arc extinguish, efficient protection to human safety and home appliances.

Higher breaking power

Efficiently arc extinguish, short circuit/overload protection.

Faster breaking speed

Break quickly to protect circuit.

Visual leakage protection

Problem can be identified quickly, protect human life.

NEW CORE, NEW STANDARD

Circuit Breaker

Micro Circuit Breaker - 65C 81

Circuit Breakers

Product	Voltage	Current	Wire connection	Size (module)	Function
1P	240/415V	10~63A	Connect line only	1	Short circuit protection Overload protection Isolation
1P+N	240V	10~40A	Connect line and neutral	1	
2P	415V	16~100A	Connect line and neutral	2	
3P	415V	16~100A	Connect 3 line	3	
4P	415V	16~100A	Connect 3 line and 1 neutral	4	
1P+N with leakage protection	240V	10~40A	Connect line and neutral	1	Short circuit protection Overload protection Leakage protection Isolation
2P with leakage protection	230/240V	10~63A	Connect line and neutral	2	
4P with leakage protection	400/415V	63A	Connect 3 line and 1 neutral	4	

MCB

Item code	Product description	Item code	Product description
SMB65C-63C10	SMB65C-63 MCB 6kA 1P C10	SMB65C-63C32/3	SMB65C-63 MCB 6kA 3P C32
SMB65C-63C16	SMB65C-63 MCB 6kA 1P C16	SMB65C-63C40/3	SMB65C-63 MCB 6kA 3P C40
SMB65C-63C20	SMB65C-63 MCB 6kA 1P C20	SMB65C-63C50/3	SMB65C-63 MCB 6kA 3P C50
SMB65C-63C25	SMB65C-63 MCB 6kA 1P C25	SMB65C-63C63/3	SMB65C-63 MCB 6kA 3P C63
SMB65C-63C32	SMB65C-63 MCB 6kA 1P C32	SMB65C-100C80/3	SMB65C-100 MCB 6kA 3P C80
SMB65C-63C40	SMB65C-63 MCB 6kA 1P C40	SMB65C-100C100/3	SMB65C-100 MCB 6kA 3P C100
SMB65C-63C50	SMB65C-63 MCB 6kA 1P C50	SMB65C-125C125/3	SMB65C-125 MCB 6kA 3P C125
SMB65C-63C63	SMB65C-63 MCB 6kA 1P C63	SMB65C-63C16/4	SMB65C-63 MCB 6kA 4P C16
SMB65C-63C16/2	SMB65C-63 MCB 6kA 2P C16	SMB65C-63C20/4	SMB65C-63 MCB 6kA 4P C20
SMB65C-63C20/2	SMB65C-63 MCB 6kA 2P C20	SMB65C-63C25/4	SMB65C-63 MCB 6kA 4P C25
SMB65C-63C25/2	SMB65C-63 MCB 6kA 2P C25	SMB65C-63C32/4	SMB65C-63 MCB 6kA 4P C32
SMB65C-63C32/2	SMB65C-63 MCB 6kA 2P C32	SMB65C-63C40/4	SMB65C-63 MCB 6kA 4P C40
SMB65C-63C40/2	SMB65C-63 MCB 6kA 2P C40	SMB65C-63C50/4	SMB65C-63 MCB 6kA 4P C50
SMB65C-63C50/2	SMB65C-63 MCB 6kA 2P C50	SMB65C-63C63/4	SMB65C-63 MCB 6kA 4P C63
SMB65C-63C63/2	SMB65C-63 MCB 6kA 2P C63	SMB65C-100C80/4	SMB65C-100 MCB 6kA 4P C80
SMB65C-100C80/2	SMB65C-100 MCB 6kA 2P C80	SMB65C-100C100/4	SMB65C-100 MCB 6kA 4P C100
SMB65C-100C100/2	SMB65C-100 MCB 6kA 2P C100	SMB65C-125C125/4	SMB65C-125 MCB 6kA 4P C125
SMB65C-125C125/2	SMB65C-125 MCB 6kA 2P C125	SMB65C-40C10	SMB65C-40 MCB 6kA 1P+N C10
SMB65C-63C16/3	SMB65C-63 MCB 6kA 3P C16	SMB65C-40C16	SMB65C-40 MCB 6kA 1P+N C16
SMB65C-63C20/3	SMB65C-63 MCB 6kA 3P C20	SMB65C-40C20	SMB65C-40 MCB 6kA 1P+N C20
SMB65C-63C25/3	SMB65C-63 MCB 6kA 3P C25	SMB65C-40C25	SMB65C-40 MCB 6kA 1P+N C25

RCBO

Item code	Product description	Item code	Product description
SMB65C-40C32	SMB65C-40 MCB 6kA 1P+N C32	SMB65CL-63C16/2	SMB65CL-63 RCBO 30mA 6kA 2P C16
SMB65C-40C40	SMB65C-40 MCB 6kA 1P+N C40	SMB65CL-63C20/2	SMB65CL-63 RCBO 30mA 6kA 2P C20
SMB65CL-40C10	SMB65CL-40 RCBO 30mA 6kA 1P+N C10	SMB65CL-63C25/2	SMB65CL-63 RCBO 30mA 6kA 2P C25
SMB65CL-40C16	SMB65CL-40 RCBO 30mA 6kA 1P+N C16	SMB65CL-63C32/2	SMB65CL-63 RCBO 30mA 6kA 2P C32
SMB65CL-40C20	SMB65CL-40 RCBO 30mA 6kA 1P+N C20	SMB65CL-63C40/2	SMB65CL-63 RCBO 30mA 6kA 2P C40
SMB65CL-40C25	SMB65CL-40 RCBO 30mA 6kA 1P+N C25	SMB65CL-63C50/2	SMB65CL-63 RCBO 30mA 6kA 2P C50
SMB65CL-40C32	SMB65CL-40 RCBO 30mA 6kA 1P+N C32	SMB65CL-63C63/2	SMB65CL-63 RCBO 30mA 6kA 2P C63
SMB65CL-40C40	SMB65CL-40 RCBO 30mA 6kA 1P+N C40	SMB65CL-63C63/4	SMB65CL-63 RCBO 30mA 6kA 4P C63
SMB65CL-63C10/2	SMB65CL-63 RCBO 30mA 6kA 2P C10		

Distribution Box

Catalog No.	Product Description	Poles	Rows	Pcs/ Box	Pcs/ Carton
SMX65CS-12AB	Distribution box 12 modules	12P	1 Row	1	5
SMX65CS-15AB	Distribution box 15 modules	15P	1 Row	1	5
SMX65CS-18AB	Distribution box 18 modules	18P	1 Row	1	5
SMX65CS-21AB	Distribution box 21 modules	21P	1 Row	1	5
SMX65CS-26AB	Distribution box 26 modules	26P	2 Rows	1	1
SMX65CS-32AB	Distribution box 32 modules	32P	2 Rows	1	1
SMX65CS-42AB	Distribution box 42 modules	42P	2 Rows	1	1

SIMON R&D STRENGTH

Creating · Innovating · Developing

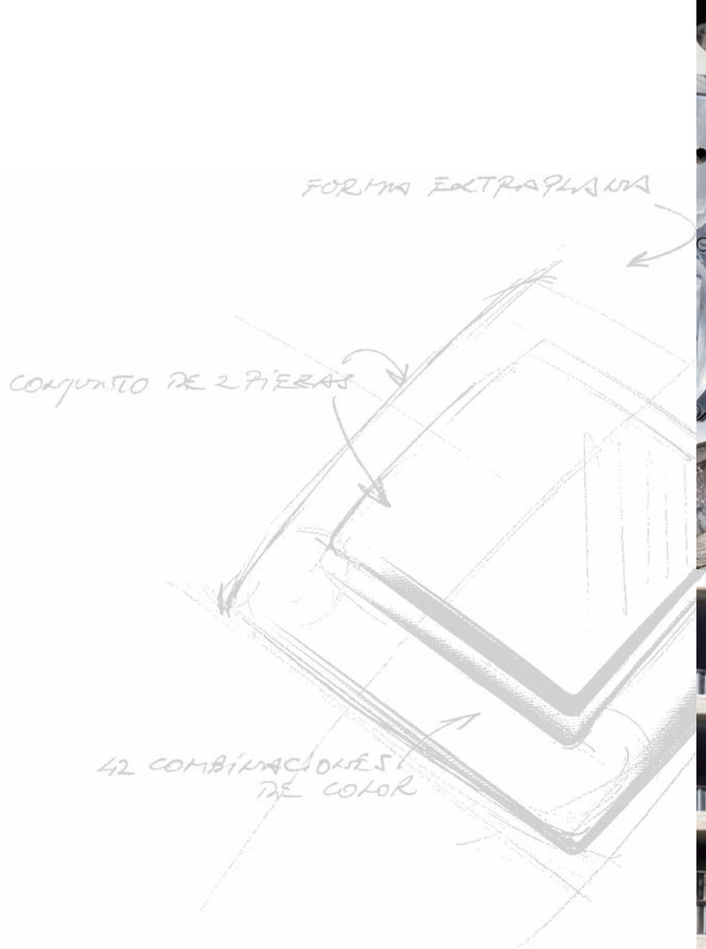

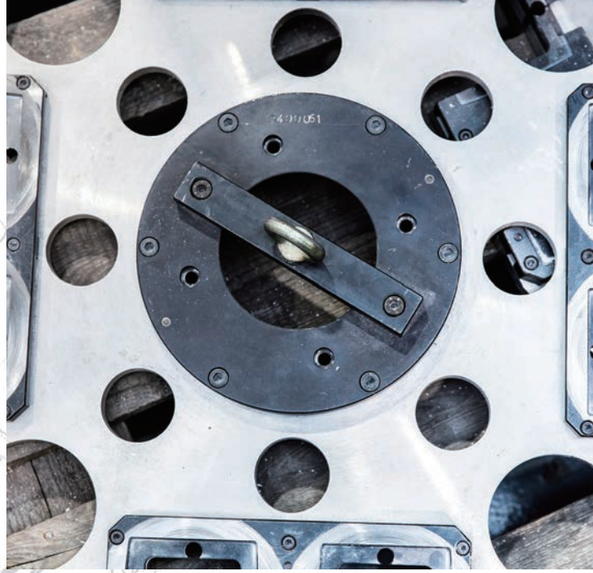

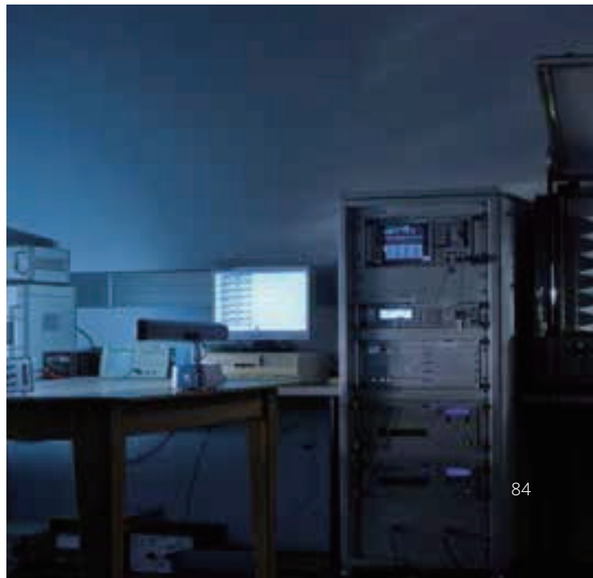

Switch & Socket

E3	85
E35	91
E6	97
51A	103
51v	109
Track socket	113

Simon|E3

Essential design / Maximum functionality

COLOUR ▸

White	-1B Beige	-44 Champagne	-57 Silver	-61 Grey

Dimensions of Applicable Box

Plate: 86*86mm
Box: 72*72mm
Fixing Center: 60.3mm

Plate: 86*146mm
Box: 72*132mm
Fixing Center: 120.6mm

Switches

301011
1 Gang 1 Way Switch (10AX 250V)

301012
1 Gang 2 Way Switch (10AX 250V)

301026
1 Gang Intermediate Switch (10AX 250V)

301011Y
1 Gang 1 Way Switch with fluorescent (10AX 250V)

301012Y
1 Gang 2 Way Switch with fluorescent (10AX 250V)

301026Y
1 Gang Intermediate Switch with fluorescent (10AX 250V)

302023
20A Double Pole Switch with LED (20AX 250V)

302024
20A 2 Way Double Pole Switch with LED (20AX 250V)

303223
32A Double Pole Switch with LED (32A 250V)

303224
32A 2 Way Double Pole Switch with LED (32A 250V)

301021
2 Gang 1 Way Switch (10AX 250V)

301022
2 Gang 2 Way Switch (10AX 250V)

301046
2 Gang Intermediate Switch (10AX 250V)

301021Y
2 Gang 1 Way Switch with fluorescent (10AX 250V)

301022Y
2 Gang 2 Way Switch with fluorescent (10AX 250V)

301046Y
2 Gang Intermediate with fluorescent (10AX 250V)

COLOUR ▶ White | -1B Beige | -44 Champagne | -57 Silver | -61 Grey

Dimensions of Applicable Box

Plate: 86*86mm
Box: 72*72mm
Fixing Center: 60.3mm

Plate: 86*146mm
Box: 72*132mm
Fixing Center: 120.6mm

301031
3 Gang 1 Way Switch
(10AX 250V)

301032
3 Gang 2 Way Switch
(10AX 250V)

301031Y
3 Gang 1 Way Switch with
fluorescent (10AX 250V)

301032Y
3 Gang 2 Way Switch with
fluorescent (10AX 250V)

301041
4 Gang 1 Way Switch
(10AX 250V)

301042
4 Gang 2 Way Switch
(10AX 250V)

301041Y
4 Gang 1 Way Switch with
fluorescent (10AX 250V)

301042Y
4 Gang 2 Way Switch with
fluorescent (10AX 250V)

Push Button Switches

302123
20A Double Pole Switch
with LED (20AX 250V)

304523
45A Double Pole Switch
with LED (45A 250V)

301011F
1 Gang Push-button Switch
(10A 250V)

301011YF
1 Gang Push-button Switch
with fluorescent (10A 250V)

Socket-outlets

306301
Doorbell Switch
(10A 250V)

301021F
2 Gang Push-button Switch
(10A 250V)

301021YF
2 Gang Push-button Switch
with fluorescent (10A 250V)

301072
Twin 2 Pin Socket
(10A 250V)

COLOUR ▶ White | -1B Beige | -44 Champagne | -57 Silver | -61 Grey

Dimensions of Applicable Box

Plate: 86*86mm
Box: 72*72mm
Fixing Center: 60.3mm

Plate: 86*146mm
Box: 72*132mm
Fixing Center: 120.6mm

301287
Twin EU-US Socket with
Earth Socket (16A 250V)

301382B
13A BS Switched Socket
(13A 250V)

301384
13A BS Switched Socket with
Twin USB Chargers (13A 250V)

301582
15A BS Switched Socket
(15A 250V)

301687
Schuko Socket
(16A 250V)

301080
2 Pin Socket and
Multi-standard Socket
(10A 250V)

301089
Multi-standard Socket
with Switch (13A 250V)

304589
Twin Multi-standard Socket
with Switch (13A 250V)

306725
Multi-standard Socket with
Twin USB Chargers
(13A 250V)

304582
Twin BS Switched Socket
(13A 250V)

304581
Twin BS Double Pole
Switched Socket
(13A 250V)

301383
13A BS Double Pole Switched
Socket (13A 250V)

Tel, TV and Data Outlets

301385
13A BS Double Pole Switched
Socket (13A 250V)

301386
13A BS Socket with Twin USB
Chargers (13A 250V)

304584
Cooker Control Unit 45A DP Switch
+ 13A DP Switched Socket with
Indicator (13A/45A 250V)

305111
TV Outlet

COLOUR ▶ White | -1B Beige | -44 Champagne | -57 Silver | -61 Grey

Dimensions of Applicable Box

Plate: 86*86mm
Box: 72*72mm
Fixing Center: 60.3mm

Plate: 86*146mm
Box: 72*132mm
Fixing Center: 120.6mm

305114
TV Outlet with F Connector

305214
Telephone Outlet

305218
Data Outlet Cat.6

305224
Twin Telephone Outlet (RJ11)

Tel, TV and Data Outlets(4 Hole)

305228
Twin Data Outlet Cat.6

305229
Telephone and Data Outlet Cat.6

305218S
Data Outlet Cat.6

305228S
Twin Data Outlet Cat.6

305302S
TV and Data Outlet Cat.6

305111S
TV Outlet

305229S
Telephone and Data Outlet Cat.6

305214S
Telephone Outlet

Others

305224S
Twin Telephone Outlet

305301S
TV and Telephone Outlet

306102
200W LED Dimmer Switch

30E104
200W LED Dimmer Switch Module (1-10V)

COLOUR ▶ White | -1B Beige | -44 Champagne | -57 Silver | -61 Grey

Dimensions of Applicable Box

Plate: 86*86mm
Box: 72*72mm
Fixing Center: 60.3mm

Plate: 86*146mm
Box: 72*132mm
Fixing Center: 120.6mm

30E201
Fan Regulator Switch

301000
Blank Plate

304500
146 Blank Plate

301001
Connect Unit

30E602
RFID Keycard Switch

30E7271
USB(5V 3A)+TYPE-C(30w)

Frames

300610
1 Gang Frame
(88mm*88mm)

300620
2 Gang Frame
(88mm*174mm)

300630
3 Gang Frame
(88mm*260mm)

Simon| E35

Timeless / Harmonious / Sleek lines design

COLOUR ▸ | White | -44 Champagne | -61 Grey | -26 Black | -6C B&G | -6A B&C | -6E G&C |

Dimensions of Applicable Box

Plate: 86*86mm
Box: 72*72mm
Fixing Center: 60.3mm

Switches

351011
1 Gang 1 Way Switch (10AX 250V)

351012
1 Gang 2 Way Switch (10AX 250V)

351026
1 Gang Intermediate Switch (10AX 250V)

351011Y
1 Gang 1 Way Switch with fluorescent (10AX 250V)

351012Y
1 Gang 2 Way Switch with fluorescent (10AX 250V)

351026Y
1 Gang Intermediate Switch with fluorescent (10AX 250V)

352023
20A Double Pole Switch with LED (20AX 250V)

352024
20A 2 Way Double Pole Switch with LED (20AX 250V)

353223
32A Double Pole Switch with LED (32A 250V)

353224
32A 2 Way Double Pole Switch with LED (32A 250V)

351021
2 Gang 1 Way Switch (10AX 250V)

351022
2 Gang 2 Way Switch (10AX 250V)

351046
2 Gang Intermediate Switch (10AX 250V)

351021Y
2 Gang 1 Way Switch with fluorescent (10AX 250V)

351022Y
2 Gang 2 Way Switch with fluorescent (10AX 250V)

351046Y
2 Gang Intermediate switch with fluorescent (10AX 250V)

COLOUR ▸ White | -44 Champagne | -61 Grey | -26 Black | -6C B&G | -6A B&C | -6E G&C

Dimensions of Applicable Box

Plate: 86*86mm
Box: 72*72mm
Fixing Center: 60.3mm

351031
3 Gang 1 Way Switch
(10AX 250V)

351032
3 Gang 2 Way Switch
(10AX 250V)

351031Y
3 Gang 1 Way Switch with
fluorescent (10AX 250V)

351032Y
3 Gang 2 Way Switch with
fluorescent (10AX 250V)

351041
4 Gang 1 Way Switch
(10AX 250V)

351042
4 Gang 2 Way Switch
(10AX 250V)

351041Y
4 Gang 1 Way Switch with
fluorescent (10AX 250V)

351042Y
4 Gang 2 Way Switch with
fluorescent (10AX 250V)

Push Button Switches

356301
Doorbell Switch
(10A 250V)

351011F
1 Gang Push-button Switch
(10A 250V)

351011YF
1 Gang Push-button Switch
with fluorescent (10A 250V)

351021F
2 Gang Push-button Switch
(10A 250V)

Socket-outlets

351021YF
2 Gang Push-button Switch
with fluorescent (10A 250V)

351287
Twin EU-US with Earth Socket
(10A 250V)

351382B
13A BS Switched Socket
(13A 250V)

351383
13A BS Double Pole Socket
with Switch (13A 250V)

COLOUR ▸ White | -44 Champagne | -61 Grey | -26 Black | -6C B&G | -6A B&C | -6E G&C

Dimensions of Applicable Box

Plate: 86*86mm
Box: 72*72mm
Fixing Center: 60.3mm

351582
15A BS Switched Socket
(15A 250V)

351687
Schuko Socket
(16A 250V)

351089
Multi-standard Socket with
Switch (13A 250V)

351080
2 Pin Socket and Multi-standard
Socket (10A 250V)

Tel, TV and Data Outlets

356725
Multi-standard Socket with Twin
USB Chargers (13A 250V)

355111
TV Outlet

355114
TV Outlet with F Connector

355214
Telephone Outlet

355218
Data Outlet Cat.6

355224
Twin Telephone Outlet

355228
Twin Data Outlet Cat.6

355229
Telephone and Data
Outlet Cat.6

TEL, TV AND DATA OUTLETS (4-HOLE)

355218S
Data Outlet Cat.6

355228S
Twin Data Outlet Cat.6

355302S
TV and Data Outlet Cat.6

355111S
TV Outlet

Switch & Socket
Simon-E35

COLOUR ▸ | White | -44 Champagne | -61 Grey | -26 Black | -6C B&G | -6A B&C | -6E G&C

Dimensions of Applicable Box

Plate: 86*86mm
Box: 72*72mm
Fixing Center: 60.3mm

355229S
Telephone and Data Outlet Cat.6

355214S
Telephone Outlet

355224S
Twin Telephone Outlet

355301S
TV and Telephone Outlet

Other

351000S
Blank Plate

351000
Blank Plate

355200
Wire outlet

355901
Emergency Switch

Frames

356102
200W LED Dimmer Switch

35E201
Fan Regulator Switch

350620
2 Gang Frame
(86mm**172mm)

350630
3 Gang Frame
(86mm*258mm)

350640
4 Gang Frame
(86mm*344mm)

350650
5 Gang Frame
(86mm*430mm)

Simon| E6

Endless / Freedom / Ingenious / Steady

COLOUR ▸ | White | -46 Champagne | -61 Grey | -26 Black

Dimensions of Applicable Box

Plate: 86*86mm
Box: 72*72mm
Fixing Center: 60.3mm

Plate: 86*146mm
Box: 72*132mm
Fixing Center: 120.6mm

Switches

721011
1 Gang 1 Way Switch
(16AX 250V)

721012
1 Gang 2 Way Switch
(16AX 250V)

721013
1 Gang 1 Way Switch with LED
(16AX 250V)

721026
1 Gang Intermediate Switch
(16AX 250V)

722023
20A Double Pole Switch
with LED (20AX 250V)

722024
20A 2 Way Double Pole Switch
with LED (20AX 250V)

723223
32A Double Pole Switch
with LED(32AX 250V)

723224
32A 2 Way Double Pole Switch
with LED (32A 250V)

721021
2 Gang 1 Way Switch
(16AX 250V)

721022
2 Gang 2 Way Switch
(16AX 250V)

721023
2 Gang 1 Way Switch with LED
(16AX 250V)

721046
2 Gang Intermediate Switch
(10AX 250V)

721031
3 Gang 1 Way Switch
(16AX 250V)

721032
3 Gang 2 Way Switch
(16AX 250V)

721033
3 Gang 1 Way Switch with LED
(16AX 250V)

721041
4 gang 1 way switch
(10AX 250V)

COLOUR ▶ White | -46 Champagne | -61 Grey | -26 Black

Dimensions of Applicable Box

Plate: 86*86mm
Box: 72*72mm
Fixing Center: 60.3mm

Plate: 86*146mm
Box: 72*132mm
Fixing Center: 120.6mm

721042
4 Gang 2 Way Switch
(10AX 250V)

721043
4 Gang 1 Way Switch
with LED (10AX 250V)

722123
20A Double Pole Switch
with LED (20AX 250V)

724523
45A Double Pole Switch
with LED (45A 250V)

Push Button Switches

726301
Doorbel Switch
(16A 250V)

721011F
1 Gang Push-button switch
(16A 250V)

721021F
2 Gang Push-button switch
(16A 250V)

721031F
3 Gang Push-button switch
(16A 250V)

Socket-outlets

721072
Twin 2 Pin Socket
(10A 250V)

721087
Single EU-US with
Earth Socket (16A 250V)

721287
Twin EU-US with
Earth Socket (16A 250V)

721382
13A BS Switched Socket
(13A 250V)

724583
Twin BS Switched Socket
(13A 250V)

724582
Twin BS Switched socket
(13A 250V)

724581
Twin BS Double Pole
Switched socket (13A 250V)

721582
15A BS Switched Socket
(15A 250V)

COLOUR ▶ White | -46 Champagne | -61 Grey | -26 Black

Dimensions of Applicable Box

Plate: 86*86mm
Box: 72*72mm
Fixing Center: 60.3mm

Plate: 86*146mm
Box: 72*132mm
Fixing Center: 120.6mm

721687
Schuko Socket
(16A 250V)

72E725
Multi-standard Socket with
Twin USB Charger (13A 250V)

721384
13A BS Switched Socket with
Twin USB chargers
(13A 250V)

721080
2 Pin Socket and Multi-standard
Socket (10A 250V)

721386
13A BS Socket with
Twin USB Chargers (13A 250V)

724584
Cooker Control Unit 45A DP
Switch + 13A DP Switched
Socket with Indicator (13A 250V)

721089
Multi-standard Socket
with Switch (13A 250V)

721385
13A BS Double Pole
Switched Socket (13A 250V)

Tel, TV and Data Outlets

725111
TV Outlet

725119
Twin TV Outlet

725114
TV Outlet F Type Connector

721120
SMATV Outlet

725214
Telephone Outlet

725218
Data Outlet Cat.6

725224
Twin Telephone Outlet
(RJ11)

725228
Twin Data Outlet Cat.6

Switch & Socket
Simon-E6

COLOUR ▶ White | -46 Champagne | -61 Grey | -26 Black

Dimensions of Applicable Box

Plate: 86*86mm
Box: 72*72mm
Fixing Center: 60.3mm

Plate: 86*146mm
Box: 72*132mm
Fixing Center: 120.6mm

725229
Telephone and Data Outlet Cat.6

725301
TV and Telephone Outlet (RJ11)

725302
TV and Data Outlet Cat.6

725401
Speakers Outlet

Control And Regulation

725402
Twin Speakers Outlet

72E102
200W LED Dimmer Switch

72E104
200W LED Dimmer Switch Module（1-10V）

72E201
Fan Regulator Switch

72E621
70-120V Volume Control Switch (3 wires) or 4 Channel Volume Control Switch (3 wires)

72E622
70-120V Volume Control Switch (7 wires) or 4 Channel Volume Control Switch (7 wires)

72E301
Presence Detector Switch (two wires)

72E302
Presence Detector Switch (three wires)

Others

72E303
Presence Detector Switch (four wires)

725901
Emergency Switch

D721022
2 Gang 2 Way Switch Module with "Do Not Disturb" & "Make Up Room" (16AX 250V)

72E601
Keycard Switch

COLOUR ▶ White | -46 Champagne | -61 Grey | -26 Black

Dimensions of Applicable Box

Plate: 86*86mm
Box: 72*72mm
Fixing Center: 60.3mm

Plate: 86*146mm
Box: 72*132mm
Fixing Center: 120.6mm

72E602
RFID keycard switch

725200
Wire outlet

721000
Blank Plate

724500
146 Blank plate

Frames

720610
1 Gang Frame（*Optional)

720620
2 Gang Frame / 86 type (86mm x 175mm)

720630
3 Gang Frame / 86 type (86mm x 260mm)

720640
4 Gang Frame / 86 type (86mm x 345mm)

720650
5 Gang Frame / 86 type (86mm x 430mm)

Switch & Socket
Simon-E6

Simon 51A

Vivid colours / Mix & Match

Colours

DIMENSION

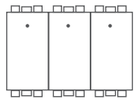

S module
24×36mm

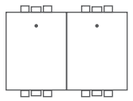

M module
36×36mm

L module
48×36mm

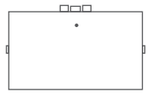

XL module
72×36mm

COLOURS

White

Tungsten
-60

Matt Black
-12

Opaque Silver
-57

Gold
-11

Champagne
-52

COLOUR ▶ White

Dimensions of Applicable Box

Plate: 74*120mm
BOX : 65*99.5mm
Fixing Center: 83.5mm

Switches

H31
1 Way Switch Module with Fluorescent (S)
(16AX 250V)

H33
1 Way Switch Module with LED (S)
(16AX 250V)

H32
2 Way Switch Module with Fluorescent (S)
(16AX 250V)

H34
2 Way Switch Module with LED (S)
(16AX 250V)

H2021
20A Double Pole Switch Module with Fluorescent (S)
(20AX 250V)

H21
1 Way Switch Module with Fluorescent (M)
(16AX 250V)

H23
1 Way Switch Module with LED (M)
(16AX 250V)

H22
2 Way Switch Module with Fluorescent (M)
(16AX 250V)

H24
2 Way Switch Module with LED (M)
(16AX 250V)

H26
Intermediate Switch Module with Fluorescent (M)
(16AX 250V)

H11M
1 Way Switch Module with Fluorescent (XL)
(16AX 250V)

H13
1 Way Switch Module with LED (XL)
(16AX 250V)

H12M
2 Way Switch Module with Fluorescent (XL)
(16AX 250V)

H14
2 Way Switch Module with LED (XL)
(16AX 250V)

H41
2 Gang 1 Way Switch Module with Fluorescent (M)
(16AX 250V)

H42
2 Gang 2 Way Switch Module with Fluorescent (M)
(16AX 250V)

COLOUR ▶ White

Dimensions of Applicable Box

Plate: 74*120mm
BOX : 65*99.5mm
Fixing Center: 83.5mm

Sockets Outlets Modules

H71
2 Pin Euro-US Socke Module (S)
(16A 250V)

H721
2 Pin Socket Module (S)
(10A 250V)

H72
2 Pin Socket Module (M)
(10A 250V)

H80
Multi-standard Socket Module (M)
(13A 250V)

Tel, TV and Data Outlets Modules

H82
Single EU-US with Earth Socket Module (M)
(16A 250V)

H86
Twin EU-US with Earth Socket Module (XL)
(16A 250V)

H401
Speakers Outlet Module (M)

H511
TV Outlet Module (S)

H51
TV Outlet Module (M)

H522
Telephone Outlet Module (RJ11) (S)

H521
Telephone Outlet Module (RJ11) (M)

H552
Data Outlet Module (Cat.6) (S)

Others

H551
Data Outlet Module (Cat.6) (M)

H01
Blank Plate Module (S)

H00
Blank Plate Module(M)

H201
400W Dimmer Switch Module (L)

Switch & Socket
Simon-51A

COLOUR ▶ White

Dimensions of Applicable Box

Plate: 74*120mm
BOX : 65*99.5mm
Fixing Center: 83.5mm

H202
200W Fan Regulator Switch Module (L)

H27
Doorbell Switch Module with Fluorescent (M)

51AE601
Keycard Switch Module

H601
LED Indicator - white color (S)

H602
LED Indicator - red color (S)

H603
LED Indicator - green color (S)

Frames

HS120
Frame (for 3 S Modules, 2 M Modules, 1 S and L Module or 1 XL Module) *New Design

HS120S1
Frame (for 1 S Module) *New Design

HS120S2
Frame (for 2 S Modules) *New Design

HS118H
Frame (for 1 M Module) *New Design"

HS118
Frame (for 3 S Modules, 2 M Modules, 1 S and L Module or 1 XL Module) *New Design

HS120R
Vertical 120 Frame (for 6 S Modules, 4 M Modules, 2 S and L Modules or for 2 XL Modules)*New Design

HS156
Horizontal 156 Frame (for 3 M Modules,1 M and 1 XL Module) *New Design

HS200
Horizontal 200 Frame (for 6 S Modules, for 4 M Modules, 2 S and L Modules or for 2 XL Modules)*New Design

H118
Horizontal 118 Frame (for 3 S Modules, 2 M Modules, 1 S and L Module or for 1 XL Module)

H118-1
Horizontal 118 Frame (for 1 S Module)

COLOUR ▶ White

Dimensions of Applicable Box

Plate: 74*120mm
BOX : 65*99.5mm
Fixing Center: 83.5mm

H118-2
Horizontal 118 Frame (for 2 S Modules)

H118H
Horizontal 118 Frame (for 1 M Module)

H120
Vertical 120 Frame (for 3 S Modules, 2 M Modules, 1 S and L Module or for 1 XL Module)

H156
Horizontal 156 Frame (for 3 M Modules, 1 M and 1 XL Module)

H200
Horizontal 200 Frame (for 6 S Modules, for 4 M Modules, 2 S and L Modules or for 2 XL Modules)

H120R
Vertical 120 Frame (for 6 S Modules, 4 M Modules, 2 S and L Modules or for 2 XL Modules)

H120-1
Vertical 120 Frame (for 1 S Module)

H120-2
Vertical 120 Frame (for 1 M Module)

Switch & Socket
Simon-51A

Simon 51v

Fits Industrial Standard / Free Combination Of Variety Modules.

COLOUR ▶ White

Dimensions of Applicable Box

Plate: 74*120mm
BOX : 65*99.5mm
Fixing Center: 83.5mm

Switches

HV31
1 Way Switch Module (S)
Fast (16AX 250V)

HV32
2 Way Switch Module (S)
Fast (16AX 250V)

HV21
1 Way Switch Module (M)
Fast (16AX 250V)

HV22
2 Way Switch Module (M)
Fast (16AX 250V)

Sockets Outlet

HV11
1 Way Switch Module (XL)
Fast (16AX 250V)

HV12
2 Way Switch Module (XL)
Fast (16AX 250V)

HV721
2 Pin Socket Module (S)
Fast (16A 250V)

HV80
Multi-standard Socket (L)
Fast (13A 250V)

Tel, TV and Data Outlets

HV82
Single EU-US with Earth
Socket Module(L)
Fast (16A 250V)

HV86
Twin EU-US with Earth
Socket Module (XL)
Fast (16A 250V)

HV552
Data Outlet Module (S)

HV522
Telephone Outlet Module (S)

HV511
TV Outlet Module (S)

HV723
Twin USB Socket (L)
Fast (2.4A 5V)

HV01
1/3 Blank Plate Module(S)
Fast

HV011
Blank Plate Module(M)
Screw

COLOUR ▸ White

Dimensions of Applicable Box

Plate: 74*120mm
BOX: 65*99.5mm
Fixing Center: 83.5mm

Frames

HV201
LED Dimmer Switch Module
(30-300W) (L)
Screw (220V)

HV17
Doorbell Switch Module (S)
Fast (16AX 250V)

HV6021
LED Indicator - red color (S)
Screw

HV120
120 Frame (For 3 S modules,
2 M modules, 1 S and 1 L module
or for 1 XL module)

HV120S1
120 Frame
(For 1 L module)

HV120L1
120 Frame
(For 1 L module)

HV120S2
120 Frame
(For 2 S modules)

HV120X2
120 X 2 Frame (For 6 S modules,
4 M modules, 2 S and 2 L modules
or for 2 XL modules)

HV118
120 Frame (For 3 S modules,
2 M modules, 1 S and 1 L
module or for 1 XL module)

HV118S1
120 Frame
(For 1 S module)

HV118L1
120 Frame
(For 1 L module)

HV118S2
120 Frame
(For 2 S modules)

HV118X2
120 X 2 Frame (For 6 S modules,
4 M modules, 2 S and 2 L
modules or for 2 XL modules)

Simon Track Socket

Less space, more outlets

COLOUR ▶ White | BL

Outlet module

MTS1189
Multi-standard socket
-Square-WH
(68*68*28)

MTS1189-BL
Multi-standard socket
-Square-BK
(68*68*28)

MTS1089
Multi-standard socket
-Round-WH
(Φ69*28)

MTS1089-BL
Multi-standard socket
-Round-BK
(Φ69*28)

MTS1381
13A BS socket
-Square-WH
(68*68*28)

MTS1381-BL
13A BS socket
-Square-BK
(68*68*28)

MTS1688
Schuko socket
-Round-WH
(Φ69*28)

MTS1688-BL
Schuko socket
-Round-BK
(Φ69*28)

MTSE721
USB Outlet-Square
-WH(DC5V2.1A)
(68*68*28)

MTSE721-BL
USB Outlet-Square
-BK(DC5V2.1A)
(68*68*28)

MTSE722
USB Outlet-Round
-WH(DC5V2.1A)
(Φ69*28)

MTSE722-BL
USB Outlet
-Round-BK(DC5V2.1A)
(Φ69*28)

Surface-mounted track

FTS4506-SL
Surface-mounted Power track
-0.6m-Silver
(600*80*20)

FTS4506-BL
Surface-mounted Power track
-0.6m-Black
(600*80*20)

FTS4508-SL
Surface-mounted-Power track
-0.8m-Silver
(800*80*20)

FTS4508-BL
Surface-mounted-Power track
-0.8m-Black
(800*80*20)

Switch & Socket
Simon-Track Socket

COLOUR ▸ White | BL

FTS4510-SL
Surface-mounted-Power track
-1m-Silver
(1000*80*20)

FTS4510-BL
Surface-mounted-Power track
-1m-Black
(1000*80*20)

FTS4512-SL
Surface-mounted-Power track
-1.2m-Silver
(1200*80*20)

FTS4512-BL
Surface-mounted-Power track
-1.2m-Black
(1200*80*20)

Recessed-mounted track

FTS5006-SL
Recessed-mounted
-Power track-0.6m-Silver
(600*82*25)
(Cutout:588*74*24)

FTS5006-BL
Recessed-mounted
-Power track-0.6m-Black
(600*82*25)
(Cutout:588*74*24)

FTS5008-SL
Recessed-mounted
-Power track-0.8m-Silver
(800*82*25)
(Cutout:788*74*24)

FTS5008-BL
Recessed-mounted
-Power track-0.8m-Black
(800*82*25)
(Cutout:788*74*24)

FTS5010-SL
Recessed-mounted
-Power track-1m-Silver
(1000*82*25)
(Cutout:988*74*24)

FTS5010-BL
Recessed-mounted
-Power track-1m-Black
(1000*82*25)
(Cutout:988*74*24)

FTS5012-SL
Recessed-mounted
-Power track-1.2m-Silver
(1200*82*25)
(Cutout:1188*74*24)

FTS5012-BL
Recessed-mounted
-Power track-1.2m-Black
(1200*82*25)
(Cutout:1188*74*24)

simon

LIGHT UP
EMOTIONS